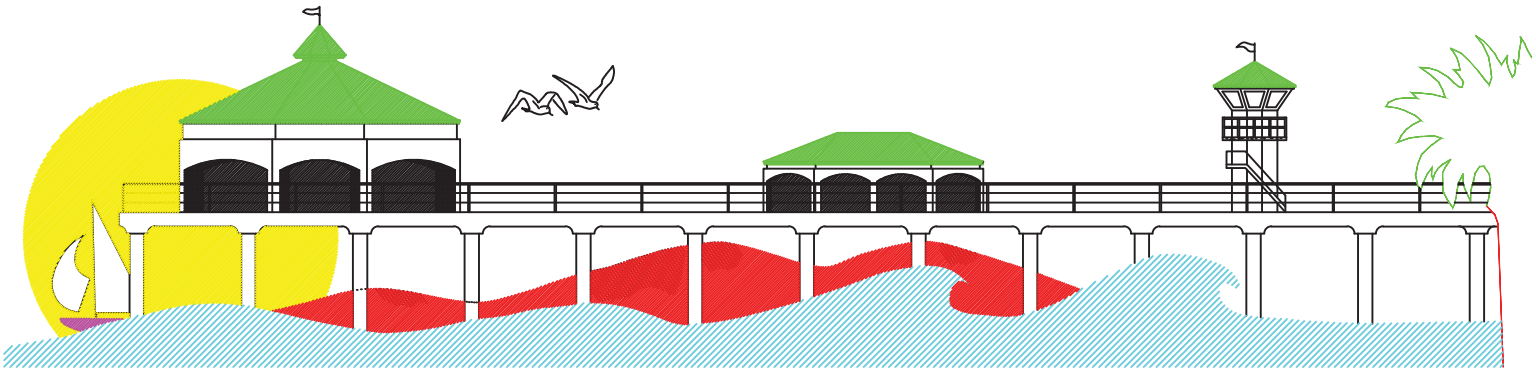

CITY OF HUNTINGTON BEACH
DEPARTMENT OF PUBLIC WORKS
WATER DIVISION STANDARDS

CITY OF HUNTINGTON BEACH

DEPARTMENT OF PUBLIC WORKS

UTILITIES DIVISION

SPECIAL PROVISIONS TO STANDARD SPECIFICATIONS

FOR PUBLIC WORK CONSTRUCTION

CITY OF HUNTINGTON BEACH

FOR CONSTRUCTION OF WATER MAINS AND APPURTENANCES

Effective December 2016

Recommended by Duncan Lee, Principal Civil Engineer, Water Engineering

Approved by _____ 12/5/16

Thomas Herbel **Date**
City Engineer

TABLE OF CONTENTS

Product manufacturers approved by the City of Huntington Beach are itemized on one-page specifications which follow. Procedures for unlisted manufacturers are described in Section 01630.

SECTION	ITEM	
00701	General Conditions	
00727	Authority of Public Works Inspectors	
01311	Coordination	
01330	Submittal Procedures	
01400	Quality Requirements	
01610	Basic Product Requirements	
01630	Product Substitution Procedures	
01650	Product Delivery, Storage and Handling Requirements	
01700	Execution Requirements	
01724	Protecting Existing Utilities	
01740	Cleaning and Final Cleaning	
01770	Closeout Procedures	
01780	Closeout Submittals	
01783	Operating and Maintenance Data	
01787	Product Warranties	
02083.1	Displacement Water Meters	
02083.2	Compound Water Meters	
02083.3	Fire / Domestic Water Meter Assemblies	
02083.4	Remote Registration Systems	
02084	Precast Concrete Meter Boxes	Includes: Meter Boxes - Parkway - ¾", 1", 1½", 2" Meters; Traffic rated meter boxes
02085.3	Air and Vacuum Valves, Water Quality Sampling Can	
02085.4	Butterfly Valves Larger Than 12"	
02085.9	Resilient Seated Gate and Tapping Valves 4"-12"	Includes: Resilient Seated Gate and Tapping Valves 16"; 12" and under
02087.1	Reduced Pressure Principle Devices (RPPD DEVICES)	
02087.2	Double Check Valve Backflow Prevention Assembly	
02088	Couplings and Expansion Joints	
02224	Abandonment of Conduits, Pipe and Structures	
02321	Trenching	Includes: Locator Tape
02323	Excavating, Backfilling and Compacting for Structures	
02445	Boring or Jacking Conduits	
02510.1	Ductile Iron Pipe and Fittings	Includes: Ductile Iron Pipe Fittings, Rubber Gasket Joints for DIP, Insulating Bushings, Unions, Flange Insulation Kits, Casing Insulators, Polyethylene Encasement, Tape for Polyethylene Encasement
02510.2	Fabricated Steel Water Pipe	

02510.3	Fasteners and Tape Wrap	
02510.5	Restrained Joints for DIP and PVC	
02510.8	Underground Service Line Valves and Fittings	Includes: Curb and Corporation 1"& 2" Stops, Curb and Corporation Stops - Contaminated Soils, Service Saddles AC & PVC Pipe, Meter Couplings and Yokes 3/4" and 1"; 1½" & 2" Meter Flanges, ¾", 1x ¾", 1", 1½", 2x1½", & 2" Angle Meter Stops, Fittings for Copper Pipe, Service Pipe
02510.9	PVC Pipe	
02513	Hydrants	
02515.1	Connections to Existing Pipelines	
02516	Disinfection of Water Distribution	
02516.1	Pipeline Disinfection Procedures	(Pipeline CONNECTED to City potable water system)
02516.2	Pipeline Disinfection Procedures	(Pipeline ISOLATED from City potable water system)
02517	Pressure Testing of Pipelines	
02530.9	PVC SCH 80 Pipe	
03100	Concrete Forms and Accessories	Includes: Waterstops, Expansion and Contraction Joints, Premolded Joint Filter, Preformed Control Joint
03200	Concrete Reinforcement	
03300	Cast in Place Concrete	
03481	Precast Concrete Vaults	
09913	Identification Systems	
9966.1	Fusion Bonded Epoxy Linings and Coatings	
09970	Coatings for Steel	
09980	Coatings for Concrete or Masonry	

SECTION 00701

GENERAL CONDITIONS

PART 1 GENERAL

1.01 INCLUSION OF CITY STANDARDS WITHIN CONTRACT DOCUMENTS

A. All construction performed for acceptance by the City of Huntington Beach Department of Public Works shall incorporate these Standards and Specifications as part of the Contract Documents as if the same were included within the Contract Documents issued to the Contractor by the Developer. Failure by the Developer to include these Standards as part of his Contract Documents issued to the Contractor shall not relieve the Developer from responsibility for performance complying with these Contract Documents.

1.02 WORK INCLUDED

A. Adopted Specifications and Drawings, Authority of the City Engineer

1.03 REFERENCE STANDARDS

A. **The City's published Standard Details and Specifications** include published standards of both the Public Works Engineering Division and the Utilities Division. These documents shall take precedence over the "Standard Specifications for Public Works Construction."

B **The "Standard Specifications for Public Works Construction" or "Greenbook Standards"** and the "Standard Plans for Public Works Construction" which are written and promulgated by the Joint Cooperative Committee of the Southern California Chapter American Public Works Association and Southern California Districts Associated General Contractors of California, and which are hereinafter referred to as the "Standard Specifications," are hereby adopted as part of these Standards. Copies of these documents may be obtained at the BNI Books Division of Building News, Incorporated, 1612 S. Clementine Street, Anaheim, California 92802 Phone 1-(800) 873-6397.

C. **AWWA Standards** published by the American Water Works Association, Inc. 6666 West Quincy Avenue, Denver, Colorado 80235 are hereby adopted as part of these Contract Documents as reference specifications.

D. **Referenced documents shall include all revisions**, amendments, supplements or addenda issued on or before the date the permit was issued. Precedence of reference standards shall be in the order listed on the specifications.

E. **The City Engineer** and through the Public Works Inspectors shall decide any and all questions arising over

- quality and acceptability of materials furnished
- quality of work performed
- manner of performance
- rate of progress of the work
- interpretation of plans and specifications
- final acceptance of completion of contracts
- claims and compensation.

SECTION 00701

GENERAL CONDITIONS

PART 1 GENERAL

1.01 INCLUSION OF CITY STANDARDS WITHIN CONTRACT DOCUMENTS

A. All construction performed for acceptance by the City of Huntington Beach Department of Public Works shall incorporate these Standards and Specifications as part of the Contract Documents as if the same were included within the Contract Documents issued to the Contractor by the Developer. Failure by the Developer to include these Standards as part of his Contract Documents issued to the Contractor shall not relieve the Developer from responsibility for performance complying with these Contract Documents.

1.02 WORK INCLUDED

A. Adopted Specifications and Drawings, Authority of the City Engineer

1.03 REFERENCE STANDARDS

A. **The City's published Standard Details and Specifications** include published standards of both the Public Works Engineering Division and the Utilities Division. These documents shall take precedence over the "Standard Specifications for Public Works Construction."

B **The "Standard Specifications for Public Works Construction" or "Greenbook Standards"** and the "Standard Plans for Public Works Construction" which are written and promulgated by the Joint Cooperative Committee of the Southern California Chapter American Public Works Association and Southern California Districts Associated General Contractors of California, and which are hereinafter referred to as the "Standard Specifications," are hereby adopted as part of these Standards. Copies of these documents may be obtained at the BNI Books Division of Building News, Incorporated, 1612 S. Clementine Street, Anaheim, California 92802 Phone 1-(800) 873-6397.

C. **AWWA Standards** published by the American Water Works Association, Inc. 6666 West Quincy Avenue, Denver, Colorado 80235 are hereby adopted as part of these Contract Documents as reference specifications.

D. **Referenced documents shall include all revisions**, amendments, supplements or addenda issued on or before the date the permit was issued. Precedence of reference standards shall be in the order listed on the specifications.

E. **The City Engineer** and through the Public Works Inspectors shall decide any and all questions arising over

- quality and acceptability of materials furnished
- quality of work performed
- manner of performance
- rate of progress of the work
- interpretation of plans and specifications
- final acceptance of completion of contracts
- claims and compensation.

PART 2 PRODUCTS

A. **Standards listed as "Materials Specification References"** in the various sections of these contract documents are hereby incorporated into this specification by reference.

PART 3 EXECUTION

A. **Standards listed as Materials or Installation Specification References** in the various sections of these contract documents are hereby incorporated into this specification by reference.

END OF SECTION

SECTION 00727 AUTHORITY OF PUBLIC WORKS INSPECTORS

PART 1 GENERAL

1.01 SUBMITTALS

A **Submit number of copies** of required submittals as follows. (The City will accept electronic submittals)

Plans & Specifications	Shop Drawings	Catalog Data	Installation Instructions	O&M Instructions	Certificate of Compliance	Engineering Calculations
5 copies	**5 copies**	**5 copies**	**2 copies**	**2 copies**	**2 copies**	**2 copies**

1.02 ACCESS AND NOTIFICATION REQUIREMENTS

A. **Public Works Inspectors** will serve as authorized agents and representatives of the City Engineer.

B. **Provide access** to Public Works Inspectors at all times for inspecting work in progress and delivered materials.

C. **Review traffic control plan** with Public Works Inspectors prior to setup and before beginning work.

D. **Notify Public Works (714) 536-5431** at least **48 hours** before time of desired inspection.

E. **Do not cover or bury work prior to inspection**. Work covered or backfilled prior to inspection shall be uncovered for inspection. Photographs will not be accepted in lieu of visual inspection.

1.03 DEFECTIVE WORK

A. **Work or materials not complying with Contract Documents** shall be immediately removed from the jobsite.

B. **Public Works Inspectors shall have authority to suspend work** wholly or in part for Contractor's failure to comply with Contract Documents, regulators requirements, Public Works permit requirement, or orders of the City Engineer.

1.04 INSUFFICIENT FORCES

A. **Public Works Inspector may postpone or reschedule any operation** if for any reason he believes the contractor is not properly prepared with competent personnel, equipment or materials to proceed with the work.

PART 2 PRODUCTS

2.01 MATERIALS

A. Materials Specification Reference: **City of Huntington Beach Public Works Standards**

B. **Public Works Inspectors may reject any unsuitable work** and/or materials notwithstanding the fact that non-complying work and/or materials have previously been overlooked.

PART 3 EXECUTION

3.01 INSTALLATION

A. Installation Specification Reference: **Standard Specifications for Public Works Construction Section 2-11**

B. **Final Inspection Checklist**

General	**N/A**	**OK**	**Not OK**	**Initials**
All phases completed in accordance with approved plans & signed Contract Documents, Development Requirements, & Public Works Encroachment Permits.				
Record drawings submitted on Mylar (4 mil).				
Easements obtained and recorded.				
Jobsite is clean and free of Contractors equipment and materials.				
Abandonment				
Legal disposal of AC Pipe				
Waterlines abandoned properly.				
Water Mains and Fittings				
Joint bonding and sacrificial anodes installed.				
Joint restraint hardware inspected.				
Grease and wrap buried hardware				
Pipe Locator wire installed.				
Backfill has passed compaction test.				
Pavement properly patched.				
Lines have passed pressure test.				
Disinfection completed.				
Flushing completed.				
Bacteriological testing.				
Valves				
All valve boxes raised to finish grade.				
Debris cleaned from valve cans.				
Repatching is completed.				
Reference measurements on valves delivered to inspector.				
Services				
No splices in service lines.				
Right angle meter stops properly positioned.				
Meter boxes properly positioned and raised to grade.				
Meters installed properly per Standard Plans.				
Fire Hydrants				
Fire hydrants raised to proper grade.				
Fire hydrants vertical.				
Fire hydrants painted appropriate color.				
Concrete pad poured.				

SECTION 01311 COORDINATION

PART 1 GENERAL

1.01 PERMITS

A. Before construction, Contractor shall obtain, pay for and comply with required permits, licenses, work permits and authorizations from appropriate agencies including the following.

State and Federal Permits

Agency	Permit	Status
Cal OSHA	Excavation permit	Contractor to obtain
California Division of Industrial Safety	Safety Permit	Contractor to obtain
City of Huntington Beach	NPDES discharge permit for discharge during dewatering, stormwater mgt, testing and disinfection	Contractor to obtain
Caltrans	Encroachment permit	Required for work in Caltrans Right of Way

Local Permits

Agency	Permit	Status
City of Huntington Beach	Building permit	Required only for buried or above ground structures.
City of Huntington Beach	Temporary construction easement	Contractor to obtain
City of Huntington Beach	Encroachment permit	Required for work in City Right of Way
Orange County Flood Control District	Encroachment permit	Required for work in District Right of Way
Contractor's home city & City of Huntington Beach	Business license	Contractor to obtain

1.02 CITY SALES TAX

A. **City sales tax shall not be waived**

1.03 NOTIFICATION

A. Provide the following advance notification to the following agencies and persons.

Agency	Event	Advance notice required	Telephone
Underground Service Alert	Prior to **any** excavation	**48 hrs**	**1-800-422-4133**
City of Huntington Beach Public Works	Required construction inspections	**48 hrs**	**714-536-5431**
City of Huntington Beach Public Works	Start of construction	**48 hrs**	**714-536-5431**
City of Huntington Beach Public Works	Disruption of streets or traffic	**48 hrs**	**714-374-1628**
City of Huntington Beach Public Works	Disruption of sewer facilities	**48 hrs**	**714-536-5921**
Southern California Edison	Disruption of buried facilities	**72 hrs**	**714-895-0221**
The Gas Company	Disruption of buried facilities	**72 hrs**	**714-634-3041**
Verizon	Disruption of buried facilities	**72 hrs**	**714-375-6702**
Time Warner Communications	Disruption of buried facilities	**72 hrs**	**714-903-8341**

B. Do not begin work until Public Works Inspector has approved Contractor's Schedule, Traffic Control Plans, Haul Routes and permits.

C. Do not operate valves or utility equipment or shut down utilities without prior written authorization of utility owner.

D. Coordinate with Public Works Inspector regarding time and place of tie-ins.

E. Direct all project communication through Public Works Inspectors.

F. Submit schedule of required inspections for key items such as formwork, steel, receipt of construction materials and other items deemed by City Engineer to require inspection.

1.04 COORDINATION WITH UTILITIES

A. Obtain and comply with service requirements from all public utilities.

1.05 COORDINATION WITH CITY

A. Submit written details and reasons for proposed deviations from Contract Documents, approved plans and/or Standards. Do not deviate until receipt of written authorization.

B. If Contractor fails to comply with a request of Public Works Inspector, and it is necessary for City forces to do work that is Contractor's responsibility, City will bill Contractor, and the job will not be finaled until the bill is paid by the developer or his contractor. Each incident requiring work by the City will be covered by a separate billing.

1.06 COORDINATION BETWEEN CONTRACTORS

A. Coordinate in advance with other contractors to interface with minimum cost and time delay for all. City is not responsible for losses or delays due to failure of other contractors to coordinate or cooperate with the contractor.

SECTION 01330

SUBMITTAL PROCEDURES

PART 1 GENERAL

1.01 WORK INCLUDED

A. General procedures and requirements for submittals, initial submittal, submittals required on Public Works Inspector's request, progress reports, shop drawings, product data and samples, notification of affected residences and businesses, and submittal forms.

B This section supplements and is added to the following Greenbook Standard Specifications.
Section 2-5.3 Submittals

1.02 RELATED WORK

A. Section 01400 Quality Requirements

B. Section 01630 Project Substitution Procedures

C. Section 01780 Closeout Submittals

1.03 SUBMITTALS

A. **Submit 5 copies** of submittals unless otherwise stated. Two copies will be returned to the Contractor.

B. **Provide submittals** necessary to prosecute Work as required by Contract Documents. Engineer's review of Shop Drawings shall not release Contractor from responsibility for deviations from City requirements documented herein, nor for the accuracy of submittals, nor for proper fitting and construction of Work, nor for the furnishing of Work or products required for a complete installation and not shown on submittal, nor for coordination of work between trades, nor for compliance with governing codes, standards and regulations. Review of submittals will indicate only that the general method of construction is satisfactory for the application or location at which it is intended. Review of submittals shall constitute review of the specific subject matter and intended application or location for which the submittal was made, and of no other structure, product, or apparatus nor other application or location shown on the submittal. When no exceptions are noted on a submittal that substantially deviates from Contract Documents or City Standards, approval of these deviations, if given, will be evidenced only by written documentation.

C. **Check and approve submittals** to determine that they comply with requirements of the Contract Documents before transmitting them to Public Works Inspectors for review. Do not submit submittals that are incomplete or do not comply with Contract Documents.

D. **Coordinate location and dimensions** of items shown in submittals so that location conflicts are eliminated.

E. **Do not begin portions of Work requiring a submittal** until submittal has been reviewed and returned stamped "NO EXCEPTION TAKEN" or "MAKE CORRECTIONS NOTED" by Engineer. Keep a copy of each returned submittal in good order at the site and available to Public Works Inspectors. Acceptance of delivery of products prior to receipt of Engineer's satisfactory return of applicable Submittals shall be at Contractor's risk.

F. **Contractor's submittal form** (included in this section) shall be completed and submitted as a separate form for each submittal number. Submittals without completed Contractor's submittal form attached to each copy

of each submittal listed in Schedule of Submittals will be returned without review and stamped "REJECTED".

G. **Exceptions and departures** from Contract Documents and City Standards shall be clearly noted, along with justifications for each exception or departure. Otherwise, review of submittals shall not constitute acceptance of exceptions or departures. Overlooked errors do not grant the Contractor license to proceed in error. The requirements of the Contract Documents shall supercede any shop drawings.

H. **Stock or standard drawings** not included in the contract documents will not be accepted for review unless full identification and supplementary information is shown thereon in ink or typewritten form.

I. **Review of submittals shall proceed as follows**:

1. Submit specified quantity of complete submittals together with Contractor's submittal forms to Public Works Inspectors for review. Fold submittals to approximately 9 inches by 12 inches.

2. Submittals will be stamped "NO EXCEPTION TAKEN", "MAKE CORRECTIONS NOTED", "REVISE AND RESUBMIT", or "REJECTED". Two copies with submittal review (included in this section) letter will be returned to Contractor.

3. If drawing or data is stamped "REVISE AND RESUBMIT", or "REJECTED", make necessary corrections and resubmit documents as required in Instruction 1. Contractor's submittal form transmitting revised documents shall show that documents comprise a resubmittal. Revisions and resubmittals shall be numbered as Revision #1, Revision #2, or as appropriate.

4. If changes other than those noted by City are made on a submittal before resubmittal, note such changes on resubmittal.

5. Revise and resubmit submittals as required, until confirmation of compliance is obtained.

J. **Allow not less than 15 calendar days** for review and response to submittals. Review may be delayed if contingent on receipt of other submittals. Upon timely written request by Contractor, City will make reasonable efforts to shorten review periods which may fall on Contractor's critical path.

1.04 INITIAL SUBMITTAL

A. **Submit the following** before ordering any products or beginning work.

1. **Names and addresses of manufacturers** furnishing products valued greater than either 5 percent of contract value or $50,000. State locations of shops at which manufacture will take place. State whether products are already designed or in production. Include a brief description of products proposed, including sizes and catalog numbers.

2. **Letter addressed to Public Works Inspector** identifying Contractor's superintendent, safety officer, and traffic control coordinator, including emergency telephone numbers and signature authorization, and a listing of names, addresses and telephones for subcontractors.

1.05 SUBMITTALS ON CITY'S REQUEST - SUPPLEMENTAL INFORMATION

A. **Detailed construction schedule updates** shall be submitted monthly to describe scheduling of any elements of construction requiring City's or Contractor's coordination with public, or other private parties or public agencies.

B. **Supplemental information** will be required for "approved alternates" and may be requested when that any manufacturer's product conformance to Contract Documents is in question. City reserves right to require submittal of supplemental information as described below before review and acceptance of any product.

C. **Certification of compliance** with listed reference standards shall be submitted by manufacturers on City's request. Certification shall establish that fabricated or manufactured products conform to specified industry standards and that fabricated or manufactured products were made under quality control standards specified. Submit certification before delivery of products to jobsite. Failure of City to request certification of compliance shall not serve as a waiver of Contractor's duty to comply with reference standards.

D. **Transcripts of results of acceptance tests** performed at point of manufacture of products furnished shall be submitted by manufacturers on City's request.

E. **Samples** shall be submitted on City's request.

F. **Names and addresses of nearest local service representatives** that maintain technical service personnel and complete inventory of spare parts and accessories shall be submitted on City's request.

G. **List of 3 installations** in which products comparable in size, capacity and rating with those required in Contract Documents are now in regular operation shall be submitted on City's request. Include listing of size capacity or rating of each installation. Include name and telephone number of at least 1 reference responsible for operations at each installation whom City may contact.

1.06 RECORD DRAWINGS

A. **Record drawings**, consisting of one set of annotated blueline plans and other drawings forming a part of the contract, showing installed locations of improvements and all changes made during construction shall be available to Public Works Inspectors for inspection throughout project. Record all deviations from Contract Documents, including change orders, using additional sketches or ink revisions, immediately after installing each portion of Work. Show locations of underground piping, conduit, sensor lines, valves, capped ends, branch fittings, pull boxes and Work. Keep 1 current record copy of Contract Documents, addenda, supplementary drawings, working drawings, change orders and clarifications at site and in good order. Report changes and deviations promptly to Public Works Inspectors.

1.07 SHOP DRAWINGS AND PRODUCT DATA

A. **Shop drawings** shall clearly show dimensions, clearances, slopes, floor space requirements, tolerances, conduit, anchor bolt sizes and embedments, finishes, performance characteristics, and weight and type of products. Show location at which products are to be installed, how equipment will be mounted, how it relates to adjacent structures or products, and how connection will be made between work under this contract and work under other contracts. Show parts lists and details of appurtenances to be furnished with specified items, along with references to appropriate ASTM, Federal Specifications and other reference standards and grades. Use of contract drawing reproductions as a substitute for shop drawings is subject to rejection.

B. **Shop drawings for replacement items**, including, doors, windows, enclosures, architectural, mechanical and electrical items shall include field measurements needed to verify fit in existing spaces.

C. **Catalog data** shall clearly indicate applicable items when several products are covered on one page. Using black ink, indicate on submitted catalog data, specification section or plan reference being satisfied.

D. **Installation or Application Instructions** shall be manufacturer's printed instructions including warranty requirements, clearances required and proper field procedures to deliver, handle, install and prepare product for use. In the absence of manufacturer's published literature, ASTM, AWWA or trade standards for proper installation will usually be accepted. If no instructions are submitted for installing or applying an item of Work, the City reserves the right to stop work on the subject item at any time, and to retain experts of his choosing to prepare appropriate installation or application instructions to control the Contractor's work.

E. **Operation and Maintenance Instructions** shall be manufacturer's printed instructions for correct operation and maintenance procedures for product, along with data that must accompany manual as directed by current regulations of government agency. Include operating instructions for each piece of equipment. Describe equipment function, operating characteristics, limiting conditions, operating instructions, startup procedures, normal and emergency conditions, regulation and control, and shutdown. Include preventative maintenance instructions. List warranty requirements. Explain and illustrate preventative maintenance tasks. Include lubrication charts, lists of acceptable lubricants, trouble shooting instructions, and lists of required maintenance tools and equipment. List recommended spare parts, their costs, and ordering information for 1 manufacturer who can supply these parts. Index instructions for easy reference. Include information for installed equipment only.

F. **Manufacturer's Statement of Responsibility** (included in this section) shall be, signed by authorized factory representative for manufacturer whose product is being furnished.

G. **Certification of Compliance** shall certify materials have been sampled, tested and found to comply with applicable reference standards.

H. All **Engineering Calculations and Drawings** shall be clearly legible, and shall demonstrate compliance with state and local codes, applicable standards, and contract requirements. Calculations shall be sealed by a civil engineer holding current registration in the State of California.

I. **Foundry or test record transcripts** shall fully describe required tests in accordance with specified test standards.

1.08 SAMPLES

A. **Furnish samples**, finished as specified, and as intended to be used on or in Work. Send samples to Public Works Inspector, carriage prepaid.

B. **Submit samples at least 14 days before purchasing**, fabricating, applying, or installing products. Allow at least 14 days for review and return of samples.

C. **Submit 2 of each sample**, except for field samples. Attach completed Contractor's submittal form to sample. List items being transmitted, stating proposed use and location, product, color, trade name, lot, style, and model as appropriate.

D. **Resubmit samples until acceptable**. One of each sample will be returned to Contractor upon acceptance.

E. **Samples of finishes** shall be 8" x 10" and shall be of minimum thickness consistent with sample presentation. In lieu thereof, submit actual full-size item.

F. **Samples of value** may be returned to Contractor for use in Work after review, analysis, comparison, and/or testing as may be required by Public Works Inspector.

G. **Furnish one sample of products, colors, or textures to Public Works Inspectors for final record**. Show identification previously described including, if finish sample, manufacturer, mix proportion, name of color, building, Contractor, subcontractor, and surfaces to which applied on back of sample.

1.09 NOTIFICATION OF AFFECTED RESIDENCES AND BUSINESSES

A. **Written notification**, with Contractor's 24-hour emergency phone number, shall be provided to residences and businesses fronting the project alignment on either side of street. Notify these parties 72 hours in advance of construction that will affect these properties. Door-hangers or other means of notification shall be submitted to and approved in advance by Public Works Inspectors.

PART 2 PRODUCTS

not used

PART 3 EXECUTION

not used

CONTRACTOR'S SUBMITTAL FORM

Project Name: _____

Permit Number: _____

Specification Section Number: _____

A "Manufacturer's Statement of Responsibility" **is / is not** (circle one) required for this section. If required it is attached.

Submittal Number: _____ Date: _____

Revision Number _____ Date: _____

City: _____

Contractor:_____

Supplier:_____

Manufacturer: _____

Contractor's Certification: I certify that I have reviewed and checked the contents of this submittal, and that the equipment or material described and marked in this submittal is proposed to be incorporated into this project, complies with the Contract Documents and the City of Huntington Beach Standards and can be installed in the allocated space.

Signed: _____ Date: _____

The following departures or exceptions from the plans and specifications are incorporated in this submittal:

SUBMITTAL REVIEW LETTER

To:

Date:_____
Project Name: _____
Specification Section Number:_____
Submittal Number: _____
Revision Number _____

Attention:

Gentlemen:

The action noted below has been taken on the enclosed drawings:

NET - No Exception Taken
MCN - Make Corrections Noted
R&R - Revise and Resubmit
R - Rejected

Item	Review Action	Refer to Comment	Manufacturer or Supplier	Title of Drawing

Corrections or comments made on submittals during this review do not relieve Contractor from compliance with Contract Documents. Review is for general compliance with Contract Documents. No responsibility is assumed for correctness of dimensions or details. Submittals are not being reviewed for safety considerations. Safety on the job site is the responsibility of the general contractor and/or installer of the item herein reviewed.

By_____

Distribution:	Submittal Review Letter	Enclosures
Contractor	_____	_____
City	_____	_____
Engineer	_____	_____

END OF SECTION

SECTION 01400

QUALITY REQUIREMENTS

PART 1 GENERAL

1.01 WORK INCLUDED

A. Inspection and testing laboratory qualifications, duties and responsibilities, and Contractor's quality control requirements.

1.02 RELATED WORK

A. Section 01330 Submittal Requirements

1.03 REFERENCE STANDARDS

A. **Work shall conform** to Federal, State and local building codes, electrical codes, fire codes, mechanical codes and plumbing codes, and to Occupational Safety and Health Act (OSHA) Regulations. Nothing in City Public Works Standards shall be interpreted as permission or direction to violate any governing code or ordinance.

1.04 SUBMITTALS

A. **Certificates of compliance** shall be submitted at Public Works Inspector's request

B. **Transcripts of results of acceptance testing** to verify quality of manufactured products shall be submitted at Public Works Inspector's request.

1.05 TESTING LABORATORY SERVICES

A. **City approved independent laboratory shall perform testing** and certify results. Provide labor, products, tools, instruments, water, and power as directed for sampling for required tests.

B. **Samples for testing** shall be representative of final work product. Samples treated differently from final work product will be deemed incapable of yielding valid test results.

C. **Tests of products** shall follow commonly recognized standards of national technical organizations, and specified sampling and testing methods.

D. **Contractor shall pay for quality assurance testing** unless otherwise shown.

E. **City may test representative samples** of each type and size of product furnished. Failure of samples to pass tests will be deemed sufficient cause to reject entire lot delivered.

1.06 CONTRACTOR'S QUALITY CONTROL

A. **Arrange Work to be readily accessible and easy to operate** and maintain where detail drawings are not included in Contract Documents, supplementary drawings or shop drawings and submittals.

B. **Combinations of manufactured equipment** shall be fully compatible and work safely and successfully as a unit. Furnish necessary mountings, couplings and appurtenances with each unit.

PART 2 PRODUCTS

not used

PART 3 EXECUTION

3.01 INSPECTION

A. **Products and Work shall be subject to field and factory inspection** and testing in accordance with standards required and defined in City Public Works Standards. Waiver by Public Works Inspectors of right to inspect shall not relieve Contractor of duties to comply with City Public Works Standards.

B. **Contractor shall provide any additional inspection and testing services required by City Public Works Standards.**

C. **City Utilities Division may provide inspection and testing not required by City Public Works Standards**. Performance of these tests and costs will be borne by City, except, that Contractor shall pay cost of any failing test.

D. **Notify Public Works Inspectors of time and place of shop tests** 5 working days before they begin. Complete manufacturing operations, checks, adjustments and tests before factory inspection.

E. **Public Works Inspectors will inspect** products after delivery and throughout construction process. Products will be subject to rejection at any time on account of nonconformance with Contract Documents even though samples may have been accepted as satisfactory at place of manufacture.

F. **Before applying finishes, request inspection** by Public Works Inspector to verify that no surfaces to receive product have defects or errors which could result in poor or potentially defective application or cause latent defects in workmanship.

G. **If Work is covered** before Contractor requests and receives inspection, it shall be uncovered at Contractor's expense. Replacement of cover shall be at Contractor's expense.

H. **Complete field tests in presence of Public Works Inspector** unless written waiver is obtained from Public Works Inspector.

3.02 FIELD QUALITY CONTROL

A. **Frequency of sampling and testing** shall be as shown, and shall be performed at such other times as necessary to document compliance.

B. **Removal and replacement of unsatisfactory work shall be at Contractor's expense**. If Contractor does not act to remove rejected Work within 10 calendar days after receipt of Written Notice, the City may remove such Work at Contractor's expense and store products at Contractor's expense.

C. **Repair damage** to work that is not cause for rejection.

D. **Repair, correct or replace Work failing tests** or inspection. Repeat tests until results satisfy specifications. Repair damages resulting from testing procedures.

END OF SECTION

SECTION 01610

BASIC PRODUCT REQUIREMENTS

PART 1 GENERAL

1.01 WORK INCLUDED

A. Basic requirements for all products used in the Work.

1.02. RELATED WORK

A. Section 01330 Submittal Procedures

B. Section 01400 Quality Requirements

C. Section 01630 Product Substitution Procedures

D. Section 01650 Delivery Storage and Handling

E. Section 01770 Closeout Procedures

PART 2 PRODUCTS

2.01 MATERIALS AND EQUIPMENT

A. **Products shall be new and of current design and manufacture**, free from defects and imperfection that might affect serviceability of the product for its intended purpose, unless otherwise stated.

B. **Products or work for which no technical specifications are set forth** shall be of the best grade in quality and workmanship obtainable in the market from firms of established good reputation, or, if not ordinarily carried in stock, shall conform to usual standards for first class products of the kind required, considering the use to which they are to be put. Work shall be in full conformity and harmony with the intent to secure the best standard of products and construction.

C. **Products and workmanship shall match Contractor's submittals** as approved by Public Works Inspector.

D **Materials and sources shall be approved** by Public Works Inspector at least 3 days before use of materials in Work.

E. **Conform to federal, state and local regulations** governing VOC content, percentage solids by volume, and other paint and solvent properties.

F. **Similar items on project shall be products of same manufacturer**.

G. **Materials for a complete paint or sealant system**, including primer, finish coats, thinners, cleaners and drying agents, and other additives shall be the end products of one manufacturer to ensure product compatibility and unit responsibility.

H. **Corresponding parts of identical products shall be interchangeable**.

I. **Design and fabrication of products** shall ensure products withstand stresses and loads which may occur during testing, installation, start-up and normal operation.

J. **Furnish mounts**, guides, bearing plates, flanges, anchor and attachment bolts and screws, saddles, supports, pads and skids necessary to securely mount products and equipment.

PART 3 EXECUTION

3.01 INSTALLATION / APPLICATION / ERECTION

A. **Manufacturer's instructions and warranty requirements** for installation, application, connection, erection, maintenance, operating, cleaning and conditioning of products shall be strictly followed.

END OF SECTION

SECTION 01630

PRODUCT SUBSTITUTION PROCEDURES

PART 1 GENERAL

1.01 WORK INCLUDED

A. Acceptable manufacturers, approved alternates, and procedures for seeking product substitutions.

1.02. RELATED WORK

A. Section 01330 Submittal Procedures

B. Section 01610 Product Requirements

1.03 SUBMITTALS

A. **Supplemental information**, including certification of compliance, transcripts of acceptance tests, samples, names and addresses of nearest local representatives, catalog data and list of 3 installations, shall be submitted for product substitutions.

B. **Where product substitutions are proposed at multiple locations**, submit copies of plans showing in red each location where the product substitution is proposed.

C. **Manufacturer's statement of responsibility** shall be required for product substitutions.

D. **Spare parts** for two years' typical maintenance may be required to be furnished prior to acceptance of products not presently in use and inventoried in the City.

1.04 QUALITY ASSURANCE

A. **If products are furnished which differ from those shown**, and which require changes to enclosures, mounting and support structures, power and control circuitry or other work to accommodate furnished product, required changes shall be provided at no additional cost to City and of same quality as shown.

PART 2 PRODUCTS

2.01 ACCEPTABLE MANUFACTURERS

A. **Products of listed acceptable manufacturers shall meet specifications** notwithstanding the fact that manufacturer is "listed". The City reserves the right to reject submittals and products from "acceptable manufacturers" if the products fail to demonstrate compliance with the specifications.

B. **Products accepted as "approved alternates"** shall, in City's opinion, meet the following requirements:

1. Products shall be of equal substance and function to those listed.

2. Products shall be standard products of a reputable manufacturer having regularly been engaged for 5 years in manufacture of items furnished.

3. Products shall have a reputation for assuring long-lasting trouble-free service.

4. Factory-authorized, factory-trained and competent service personnel and stocked service parts shall be available within a 150 mile radius of the Work.

5. The manufacturer shall be capable of certifying compliance with listed reference standards.

C. **If substitutions are approved**, no major changes in the function or general design of the Work shall result. Incidental changes or extra component parts required to accommodate substitutions shall be provided at no charge and with no change in Contract Time.

D. **City of Huntington Beach reserves the right to reject product substitutions** solely on the basis of maintenance economies of scale available to the Public Works Department through standardization of manufacturers and controlled spare parts inventories.

PART 3 EXECUTION

not used

END OF SECTION

SECTION 01650

PRODUCT DELIVERY STORAGE AND HANDLING REQUIREMENTS

PART 1 GENERAL

1.01 WORK INCLUDED

A. Transportation and handling, storage and protection of products.

B. This section supplements and is added to the following Greenbook Specifications;

Section 4 -Control of Materials

1.02. RELATED WORK

A. Section 01330 Submittal Procedures

B. Section 01400 Quality Requirements

C. Section 01610 Basic Product Requirements

1.03 DELIVERY, STORAGE AND HANDLING

A. **Deliver products to jobsite in manufacturer's original, unopened, labeled packaging**.

B. **Only products of approved manufacturers** shall be delivered and stored at the site.

C. **Store materials in a protected area** at a temperature between 35 F and 110 F.

D. **Store products so as to preserve their quality** and fitness for the Work. Locate stored products and equipment to be incorporated in the Work to facilitate prompt inspection. Contractor shall be responsible for damage, contamination or loss of products until Final Acceptance.

E. **Protect products** against moisture, temperature extremes, dust, debris, tampering, vandalism, ultraviolet radiation, or damage from improper handling, storage, or exposure. Protect exposed metals from rust and corrosion even in cases where they will be sandblasted or otherwise cleaned before painting.

F. **Oil lubricated gearing, bearings** and other lubricated components shall be shipped with oil soluble protective coating as described in warranty requirements or recommended by manufacturer. Coating shall provide protection for 1 year after final acceptance.

G. **Clean and protect machined surfaces** and shafting from corrosion using proper type and amount of coating as described in warranty requirements to assure protection to 1 year after final acceptance.

H. **Store items not designed for outdoor exposure** off ground and under cover.

I. **Handle products with care** using proper equipment according to manufacturer's recommendations. Lift large heavy items only at points designated by manufacturer. Do not drop, drag, bump or mishandle products in manner that causes bruises, cracks, scratches or other damage. Use padded slings and hooks for lifting as needed to prevent damage. Improper handling shall be cause for rejection.

J **Inspect each product item** for damage, defects, completeness and correct operation before installing.

K **Notify City in writing if delivered or stored product is damaged**. Exterior surfaces of delivered items shall be in perfect unblemished condition. Do not repair damaged products without prior written approval.

L **Maintain records for City's review** of deliveries to show Contractor's order number, purchase order number and equipment number. Include labeling or shipping tag in records.

PART 2 PRODUCTS

not used

PART 3 EXECUTION

3.01 WARRANTY REQUIREMENTS

A. **Manufacturer's instructions and warranty requirements** for delivery storage and handling of products shall be strictly followed.

END OF SECTION

SECTION 01700

EXECUTION REQUIREMENTS

PART 1 GENERAL

1.01 WORK INCLUDED

A. Examination of site before bidding, Preparation for construction, and execution of Work

1.02 RELATED WORK

A. Section 01400 Quality Requirements

B. Section 01724 Protecting Existing Utilities

C. Section 01740 Cleaning and Final Cleaning

D. Section 01770 Closeout Procedures

E. Section 01780 Closeout Submittals

1.03 EXAMINATION

A. **Ascertain suitability of native soil** for backfill before submitting bid. If native soil is found to be unsuitable, provide suitable material for meeting compaction requirements at no additional cost.

B. **Items furnished shall be capable of fulfilling their intended purpose** in the environment in which they are installed. Allow for local temperature extremes, climactic conditions and corrosive environments where necessary to ensure proper functioning of furnished products.

1.04 SUBMITTALS

A. **Submit current welder testing agency certificates** for welders proposed for work. Submittal shall include test results per Section IX Part A of AWS B2.1.

B. **X-Ray test results** of welds shall be submitted on request.

1.05 PREPARATION

A. **Carefully lay out work in advance** to minimize cutting, channeling, chasing or drilling of structural pads or elements. Cuts, channeling, drilling, or welding required shall be reviewed in advance with Public Works Inspector. Do not begin such work until notified by Public Works Inspector. Repair damage to structures, piping equipment or finishes using skilled workers of appropriate trades.

B. **Relocations or adjustment of existing facilities** shall be done only as needed. If existing items are lost or damaged during construction, replace with new items of equal or better quality.

C. **Make field measurements** needed to fabricate and install Work before ordering or beginning work. Make minor changes in alignments and dimensions as needed to remedy or avoid utilities and structural conflicts.

PART 2 PRODUCTS

not used

PART 3 EXECUTION

3.01 INSTALLATION / APPLICATION / ERECTION

A. **Maintain complete set of Contract Documents** at jobsite field office or superintendent's truck at all times.

B. **Install products according to manufacturer's installation and warranty requirements**. Install products to tolerances recommended by manufacturer. Unless otherwise shown, install equipment true and level, using precision gauges and levels.

C. **Refer variances** between manufacturer's installation instructions and Contract Documents to Public Works Inspector.

D. **Construct walls, floors and flatwork** plumb, straight, level, square and true. Acceptable deviations from plumb or level shall not exceed ¼-inch in any 32-inch section. Flatwork shall not deviate from plan elevation by more than ¾-inch at any location.

E. **Welds**, unless otherwise shown, shall be continuous, watertight, and in conformance to the Structural Welding Code of American Welding Society. Welds shall be free of sharp points or edges. Welders shall be AWS certified as boiler and pressure vessel welders per Section IX Part A of AWS B2.1 as required by AWWA C200 paragraph 3.3.3.1 or AWWA C206.

F. **Exposed surfaces** shall be finished in appearance. Grind smooth exposed welds. Round or chamfer corners of exposed structural shapes for personnel protection.

G. **Prime and paint exposed surfaces** of ferrous products, piping, and conduit except for stainless steel or galvanized surfaces or unless otherwise shown. Clean painted surfaces and touch up bare or marred spots with finish to match factory finish.

H. **Paint and coat** in workmanlike manner so as to produce an even film of uniform thickness. Pay attention to edges, angles, flanges, corners, crevices, and joints to insure that they have been thoroughly cleaned and that they receive specified thickness of paint or coating. Finished surfaces shall be free from runs, drops, ridges, waves, shiners, laps, holidays, brush marks, and variations in color, texture and finish. The hiding shall be so complete that addition of another coat would not increase the hiding. Apply coats so as to produce film of uniform thickness.

I. **Pipework**, valves, fittings, tanks and appurtenances shall have no leaks at design or test pressures.

END OF SECTION

SECTION 01724

PROTECTING EXISTING UTILITIES

PART 1 GENERAL

1.01 WORK INCLUDED

A. Materials and procedures to protect existing underground utilities.

B. This section supplements and is added to the following Standard Specifications

Section 5 -Utilities

1.02 RELATED WORK

A. Section 01311 Coordination

B. Section 01330 Submittal Procedures

C. Section 01700 Execution Requirements

1.03 SUBMITTALS

A. **Plans for supporting pipe and utilities** crossing trenches shall be submitted in the following instances;

1. When utilities to be supported exceed 16 inches in diameter.

2. When requested in writing by the Public Works Inspector.

B. **Engineered calculations** shall be submitted for pipe supports for existing utilities greater than 24 inches in any dimension. If concrete beams are used as supports, calculations shall take into account concrete strength based on the days elapsing between placing concrete and trenching beneath concrete beams. Do not use 28 day strength unless concrete will be at least 28 days old when the beam is placed in service.

1.04. PROJECT CONDITIONS

A. **Utility locations are based solely on record drawings and surface features.** Plotted locations may not accurately reflect subsurface conditions.

B. **If Contractor discovers Utility facilities not identified** in Contract Documents, Contractor shall immediately notify Public Works Inspectors in writing.

C. **Utilities not shown on plans or which are shown on plans in a position different from field location** shall, upon discovery, be immediately brought to attention of Public Works Inspectors in writing. Contractor will be responsible for timely removal, relocating, protecting and/or temporary maintenance of existing main or trunkline utility facilities not shown on contract documents. Changes in alignment and grade will be ordered in accordance with provisions pertaining to changes in work.

D. **Damage to underground utilities, pipelines or other facilities** shall be immediately brought to the attention of the Public Works Inspector and the affected Utility, and repaired at the Contractor's expense. Exact determination of the location of these utilities, pipelines or other facilities shall be the responsibility of the Contractor. The Contractor shall be solely and directly responsible for damage, injury, expense, loss, inconvenience, delay, suits, actions or damage which may result from Contractor's failure to verify or locate

utilities whose existence is indicated. Costs incurred for protection of these lines or costs incurred due to the presence of the lines, whether or not they lie within the trench prism, shall be borne in full by the Contractor.

E. Work on damaged water facilities shall be done in a manner satisfactory to the City Public Works Department. The Public Works Department will have the option of doing such work with their own forces and backcharging the Contractor, or permitting the work to be done by the Contractor.

PART 2 PRODUCTS

not used

PART 3 EXECUTION

3.01 PREPARATION

A. **Notify Underground Service Alert 1-(800) 422-4133 and Utilities** at least 2 working days before excavating. Contractor shall be responsible for damage done to public or private property shown on plans or marked or staked in field.

B. **Construction schedule shall be provided to Public Works Inspector and other utilities by Contractor.** Coordinate construction schedule with the Utility Owner's requirements.

D. **Pothole all known utilities sufficiently far enough ahead of pipe and conduit laying** operations to allow for adjustment in alignment or grade line, to verify pipe types and sizes for ordering proper transition and/or tie-in fittings, and to allow Public Works Inspectors to verify that no buried utilities interfere with proposed construction. Potholing shall identify true location and depth, type, material and condition of utilities and service connections. If potholing is not done, repair or replacement of damaged utilities and necessary horizontal and vertical realignments shall be entirely at Contractor’s expense.

E. **In addition to potholing, excavate in advance of the pipeline construction** to expose unknown utilities to allow for field adjustments.

F. **Electrical Utilities may maintain energized underground electrical power lines** in the immediate vicinity of this project. These power lines represent an extreme hazard from electrical shock to construction personnel or equipment coming in contact with them. State law requires parties planning excavations in public right of way to contact Utilities for locations of their underground facilities. Contractors, their employees, and other personnel working near underground power lines must be warned to take adequate protective measures. (See: OSHA Std. 1926-651(A)). Notify the electrical Utility to arrange, if possible, to have these lines de-energized when the work reaches their immediate vicinity. The cost of such temporary arrangements shall be borne by the Contractor.

G. **Electrical utility companies may maintain energized aerial electrical power lines** in immediate vicinity of Work. Do not consider these lines to be insulated. Construction personnel working near these lines are exposed to an extreme hazard from electrical shock. Contractors, their employees and construction personnel working on this project must be warned of the danger and instructed to take adequate protective measures, including maintaining a minimum of 10 feet clearance between lines and construction equipment and personnel. (See OSHA Std. 1926.550(A)15). As an additional safety precaution, call electrical utility company to arrange, if possible, to have these lines de-energized or relocated when Work reaches their immediate vicinity. Cost of such temporary arrangements shall be borne by Contractor.

H. It shall not be the responsibility of the City of Huntington Beach or any agent or representative of the City to verify the need for electrical Utility shutdowns, nor to verify that shutdowns have taken place.

3.02 INSTALLATION

A. **Utilities relocated or rebuilt for the Contractor's convenience**, shall be relocated or rebuilt at the Contractor's expense. Repair, replacement or relocation of buried utilities shall be completed at the Contractor's expense by either Utility's forces, or by a contractor approved by the Utility in writing and properly licensed to perform the work.

B. **Utility relocation or reconstruction** shall conform to applicable utility standards and specifications, directions, and Inspector. Provide temporary service for the disconnected utility. Before replacing a utility, backfill the trench and compact to an elevation 1 foot above the top of the ends of the utility. Excavate a cross trench of the proper width for the utility.

C. **Replace damaged or removed utilities in kind**, except as otherwise shown or authorized by Public Works Inspector. Reconstruct utilities with new material of the same size, type and quality as that removed.

D. **Backfill and compact** under and around utilities so that no voids are left.

E. **Inspectors may require sand slurry as backfill** per Standard Plans for Public Works Construction to ease compaction. Sand slurry shall consist of one sack (94 pounds) Portland cement per cubic yard of sand. Add sufficient moisture for workability. Submit specific methods and procedures to Public Works Inspector prior to construction.

F. **Abandoned utilities** within the trench shall be removed and disposed of. Cut abandoned utilities and plug ends with brick and mortar, unless otherwise shown. Plug water mains per City of Huntington Beach Standard Drawing 613 and Standard Specification 02224. Dispose of the cut pipe.

3.03 PROTECTION

A. **Protect existing active services and utilities** against damage from demolition and construction. Do not shut down active services or utilities except where previous written authorization has been obtained from the Public Works Inspector and utility.

B. **Use pipe and duct supports and shoring** as needed to protect utilities.

C. **Notify Utilities in writing** before authorized shutdown.

D. **Unauthorized shutdowns** shall only be made where necessary, as an extreme emergency measure, to protect property or human life until proper authorization can be obtained.

E. **All high lines or temporary water services** shall be provided by contractor. For a scheduled shutdown where temporary service must be provided, the contractor shall submit a high line plan for division approval.

END OF SECTION

SECTION 01740

CLEANING AND FINAL CLEANING

PART 1 GENERAL

1.01 WORK INCLUDED

A. Cleaning during construction and final cleaning on completion of the work.

B. This section supplements and is added to the following Standard Specifications.
Section 7-8.1 Cleanup and Dust Control

1.02 CLEANING DURING CONSTRUCTION

A. **Maintain areas** covered by Contract, adjacent properties, and public access roads. Keep these areas free from waste, debris and rubbish caused by construction.

B. **Sweep streets** daily using self-loading motor sweeper with spray nozzles. If streets are kept clean, a lesser frequency or alternate sweeping methods may be approved by Public Works Inspector.

C. **Conduct cleaning and disposal to comply with local ordinances and antipollution laws**. Do not burn or bury rubbish and waste materials on project site. Do not dispose of volatile wastes, such as mineral spirits, oil or paint thinner, in storm or sanitary drains. Do not dispose of wastes into streams or waterways.

D. **Use only cleaning materials recommended** by manufacturer of surface to be cleaned.

E. **Wet down dry materials** and rubbish to prevent blowing dust.

F. **Provide containers** for collection and disposal of waste materials, debris and rubbish.

G. **Clean public access roads** to site. Remove material falling from haul trucks.

1.03 FINAL CLEANING

A. **Restore construction areas to preconstruction conditions** after completing of work and immediately before final inspection.

B. **Restore drainage swales and slopes** which may have been affected by the work

C. **Restore lines and grades** of areas used for earthwork storage.

D. **Clean, sweep, and wash Work** and equipment including finishes.

E. **Remove grease, dust, dirt, stains, labels, fingerprints and foreign materials** from sight-exposed interior and exterior finished surfaces. Polish surfaces so designated.

F. **Repair, patch and touch up** marred surfaces to specified finish to match adjacent surfaces.

G. **Broom clean** paved surfaces.

H. **Rake clean** other surfaces of grounds.

I. **Remove from City's property temporary structures** and materials, equipment and appurtenances not required as part of, or appurtenant to, completed Work.

J. **After Work is complete, remove from site** loose concrete, lumber, wire, aggregate or rock piles, reinforcing, rubbish, debris and materials not incorporated in Work. Remove excess mortar materials and other debris within pipes.

PART 2 PRODUCTS

not used

PART 3 EXECUTION

not used

END OF SECTION

SECTION 01770

CLOSEOUT PROCEDURES

PART 1 GENERAL

1.01 WORK INCLUDED

A. Specific administrative procedures required at substantial completion and final completion of work.

1.02. RELATED WORK

A. Section 01400 Quality Requirements

B. Section 01740 Cleaning and Final Cleaning

C. Section 01780 Closeout Submittals

D. Section 01783 Operating and Maintenance Data

E. Section 01787 Product Warranties

1.03 QUALITY ASSURANCE

A. **Upon completion of Contract, Work shall be finished, tested and ready for operation**. Work shall fulfill its intended purpose as described in Contract Documents, in submittals, and in manufacturer's literature.

B. **Where connections or disruptions have been made** to existing work, repair, reactivate, refill and recharge components, restoring them to preconstruction conditions. Follow procedures of authorities having ownership or jurisdiction for work involving existing utilities and services.

PART 2 PRODUCTS

not used

PART 3 EXECUTION

3.01 ADJUSTING AND CLEANING

A. Manhole rim elevations, valve box cover elevations and vault cover elevations may not be shown on drawings. Determine and set rim or cover elevations in field so that finished rim or cover elevations are flush with finished pavement.

END OF SECTION

SECTION 01780

CLOSEOUT SUBMITTALS

PART 1 GENERAL

1.01 WORK INCLUDED

A. Closeout submittals required at substantial completion and final completion of work, spare parts and project record documents.

1.02. RELATED WORK

A. Section 01330 Submittal Requirements

B. Section 01400 Quality Requirements

C. Section 01783 Operating and Maintenance Data

D. Section 01787 Product Warranties

1.02 PROJECT RECORD DOCUMENTS

A. **Final record drawings** shall be prepared from survey notes, field notes and system demonstration logs and shall be submitted in ink on mylar prints bearing seal of registered civil engineer or land surveyor who performed survey for record drawings. Note hydraulic and electric equipment control settings used for system demonstration on record drawings. Record changes neatly and accurately using 1/8-inch size lettering and dimensions.

B. **Monument survey** showing record locations of monuments or benchmarks disturbed and reset (if any) by Contractor shall be sealed by a civil engineer or land surveyor holding current State of California registration and submitted to City.

C. **Legal descriptions of easements** including plats, sealed by a civil engineer or land surveyor holding current State of California registration, shall be recorded and submitted per City of Huntington Beach requirements.

PART 2 PRODUCTS

not used

PART 3 EXECUTION

3.01 EXTRA STOCK / SPARE PARTS

A. Spare parts required shall be delivered to City in manufacturer's original containers labeled to completely describe contents and equipment for which it is furnished.

END OF SECTION

SECTION 01783

OPERATING AND MAINTENANCE DATA

PART 1 GENERAL

1.01 WORK INCLUDED

A. Operation and maintenance data sheets.

1.02 RELATED WORK

A. Section 01330 Submittal Procedures

B. Section 01787 Product Warranties

1.03 SUBMITTALS

A. **Equipment maintenance data sheets** shall be submitted for valves, meters and equipment furnished. Use attached form (in this section) and follow format of attached sample Data Sheet to summarize equipment furnished, nameplate data, and equipment manufacturer's maintenance instructions and recommendations.

B. **The following shall be appended to each Operation and Maintenance Data Sheet.**

1. Catalog data
2. Parts lists
3. Warranty information

PART 2 PRODUCTS

not used

PART 3 EXECUTION

not used

END OF SECTION

EQUIPMENT MAINTENANCE DATA SHEET

Preventive Maintenance Program	Equipment Record Number	
EQUIPMENT DESCRIPTION	ELECTRICAL OR MECHANICAL DATA	
Name:	Size:	
Serial No.:	Model:	
Vendor:		
Vendor Address:	Type:	
	Mfr:	
Vendor Rep:	Turns to close:	Lube Requirements:
Phone:	Packing:	Electrical Requirements:
Maintenance and Lubrication Work to be Done		Frequency*
OPERATING REQUIREMENTS AND REFERENCE		

*D - Daily; W - Weekly; B - Biweekly; M - Monthly; Q - Quarterly; S - Semiannually; A - Annually

SAMPLE

EQUIPMENT MAINTENANCE DATA SHEET

Preventive Maintenance Program	Equipment Record Number	
EQUIPMENT DESCRIPTION	ELECTRICAL OR MECHANICAL DATA	
Name: Influent Pump No. 1 Tag No.: P01-1	Size: 15 HP	
Serial No.: 123456ABC	Model: 140T Frame Serial No. 987654ZY Class F Insulation w/ Space Heater	
Vendor: ABC Pump Co.		
Vendor Address: 1234 Richter Avenue Irvine, CA 92714	Type:	
	Mfr: DEF Motors, Inc.	
Vendor Rep: XYZ Equipment, Inc.	Turns to close: 40 turns on shutoff valve	Lube Requirements: Acme Grease Type 5.
Phone: 714-752-0505	Packing: Brand X Model 40	Electrical Requirements: 460V - 3phase – 20 amp
Maintenance Work to be Done		Frequency*
1.Operate valves and check such things as a) bearing temperature, b) changes in running sound, c) suction and discharge gage readings, d) pump discharge rate, and e) general condition of the drive equipment.		D
2.Check packing.		
3.Check pumping unit for any dust, dirt or debris.		D
4.Lubricate bearing frame and motor bearings (consult manufacturer's instructions for type of grease or oil).		W
5.Disassemble and change or repair the following: a) impeller, b) shafts, c) shaft sleeve, d) rotary seals, and e) sleeve bearings.		Q A
OPERATING REQUIREMENTS AND REFERENCE		
For manufacturer's instructions regarding installation, operation, maintenance and troubleshooting of this equipment, see Volume ____, Section ____.		

*D - Daily; W - Weekly; B - Biweekly; M - Monthly; Q - Quarterly; S - Semiannually; A - Annually

SECTION 01787

PRODUCT WARRANTIES

PART 1 GENERAL

1.01 WORK INCLUDED

A. Warranties are required for all Work accepted by the Public Works Department.

1.02. RELATED WORK

A. Section 01330 Submittal Requirements

B. Section 01400 Quality Requirements

1.03 ONE-YEAR PRODUCT WARRANTIES

A. **Warranties** shall cover improper assembly or erection, defective workmanship and products, and incorrect or inadequate operation.

B. **1 year warranty** shall be furnished for all Work and manufactured items. Warranty shall cover parts, labor, and prompt service for repair of defects, performance failure or damage due to normal wear and tear or due to any cause other than acts of God, or intentional or active and extreme abuse of the product. The warranty period shall extend 1 year beyond final acceptance of completed contract by City.

C. **In addition to manufacturer's standard warranty, furnish services** of factory-authorized and factory-trained serviceman to promptly provide repair service for mechanical equipment for the specified warranty period. This service shall include the cost of all replacement parts required during that period.

1.04 ELEVEN MONTH ANNIVERSARY WARRANTY INSPECTION

A. **Warranty inspection** shall be conducted during 11th month following completion of Work.

B. **Locations found in warranty inspection where paving, coating, or paint has peeled, bubbled or cracked**, and locations where rusting is evident will be considered a system failure. Repair defective work identified during warranty inspection by removing deteriorating paving, coating or paint system, cleaning surface, and repaving, recoating or repainting with same system. Electrically test repaired painted areas. If area of failure exceeds 25% of total paved, coated or painted surface for pavement, coating or paint system on any structure or surface, remove and recoat entire paving, coating or paint system per original specification.

C. **Other failed products found in warranty inspection** shall be repaired per warranty requirements.

D. **City of Huntington Beach will establish date for warranty inspection** and will notify Contractor at least 30 days in advance. If notification of inspection date does not occur within 12 months after final acceptance, the first anniversary inspection shall be considered to be waived.

PART 2 PRODUCTS

not used

PART 3 EXECUTION

not used

END OF SECTION

SECTION 02083.1 DISPLACEMENT WATER METERS

PART 1 GENERAL

1.01 QUALITY ASSURANCE

Item	Test For	Test Standard	Frequency	First Test Paid By	Retests Paid By
Displacement Meters	Operation	visual observation	1 test	City	Contractor

1.02 SUBMITTALS

Shop Drawings	Catalog Data	Installation Instructions	O&M Instructions	Certificate of Compliance	Certificate of Test Accuracy
yes	yes	yes	yes	on request	on request

1.03 WARRANTY 25 year warranty required on nonmoving parts. 15 year guarantee required on accuracy.

PART 2 PRODUCTS

All brass and bronze shall comply with California Assembly Bill No. 1953, Chapter 853.

2.01 ACCEPTABLE MANUFACTURERS

A. Displacement Meters: Neptune T-10 E-Coder Pit Cu. Ft. / Register Potted with ACLARA MTU / with AMI Endpoint and Mounting Bracket

2.02 MATERIALS

A. Materials Specification Reference: AWWA C700 Cold Water Meters - Displacement Type, Bronze Main Case

B. Materials Schedule:

Meter

Location	House Connection	Attached Housing or Commercial		
Size	0.75 in	1 in	1.5 in	2 in
Meter Laying Length	7.50 in	10.75 in	13 in	17 in
Meter Connection Spuds	3/4" threaded	1" threaded	2 point oval flanged spuds	2 point oval flanged spuds
Working Pressure	150 psi			
Fluid	Water			
Fluid Temperature (Max.)	80 F			

Flow Range (gpm)

AWWA Minimum Flow	0.5 gpm	0.75 gpm	1.5 gpm	2.0 gpm
AWWA Minimum Flow Accuracy	95%<Minimum Flow<101%			
AWWA Normal Flow (gpm)	2 - 30	3 - 50	5 - 100	8 - 160
AWWA Normal Flow Accuracy	100% +/- 1.5% of actual flow			
AWWA Continuous Flow (gpm)	15	25	50	80
Pressure Loss at Maximum Flow	11 psi at 30 gpm	10.9 psi at 50 gpm	11.4 psi at 100 gpm	12.1 psi at 160 gpm

Material

Main Casing	Waterworks Bronze	
Style	Standard	Split Case
Casing Bolts	Waterworks Bronze	
Measuring Chamber	Polymer	Waterworks Bronze
Serial Number	Stamp on Bronze Meter Body	
Measuring Chamber Type	Oscillating Piston	

Flow Indicator

Registration Units	Cubic feet			
Readability	Straight reading with low flow indicator			
Totalizer Digits	6			
Register Sweep Hand Revolution	one cubic foot	one cubic foot	10 cubic feet	10 cubic feet

PART 3 EXECUTION

3.01 INSTALLATION

A. Installation Specification Reference: Manufacturer's installation instructions
City of Huntington Beach Standard Drawings 601 through 603

1-Sep-13

SECTION 02083.2 COMPOUND WATER METERS

PART 1 GENERAL

1.01 QUALITY ASSURANCE

Item	Test For	Test Standard	Frequency	First Test Paid By	Retests Paid By
Compound Water Meters	Operation	visual observation	1 test	City	Contractor

1.02 SUBMITTALS

Shop Drawings	Catalog Data	Installation Instructions	O&M Instructions	Manufacturer Statement of Responsibility	Certificate of Compliance	Certificate of Test Accuracy
yes	yes	yes	no	no	yes	yes

PART 2 PRODUCTS All brass and bronze shall comply with California Assembly Bill No. 1953, Chapter 853.

2.01 ACCEPTABLE MANUFACTURERS

A. Compound Meters: Sensus Metering Systems (typ), Uniontown, PA, "Omni Compound Meter"

2.02 MATERIALS

A. Materials Specification Reference: AWWA C702, "Cold Water Meters-Compound Type"

B. Materials Schedule:

Meter			
Location	In Vault		
Size	3 in	4 in	6 in
Meter Laying Length	17 in	20 in	24 in
Meter Flanges, ANSI Class 125	3 in Round	4 in Round	6 in Round
Meter Model	S.R. or S.R.H.		
Working Pressure	150 psi		
Fluid	Water		
Fluid Temperature (Max.)	80 F		
Flow Range (gpm)			
AWWA Minimum Flow	0.5	0.8	1.5
AWWA Minimum Flow Accuracy	95%<Minimum Flow<101%		
AWWA Normal Flow (gpm)	4 - 320	5 - 500	10 - 1000
AWWA Normal Flow Accuracy	100% +/- 1.5% of actual flow		
AWWA Continuous Flow (gpm)	160	250	500
Repeatability			
Pressure Loss at Maximum Flow	5.3 psi at 160 gpm	3.2 psi at 250 gpm	13 psi at 1000 gpm
Material			
Main Casing	Waterworks Bronze		
Casing Bolts	Waterworks Bronze		
Measuring Chamber	Polymer		
Serial Number	Stamped on Bronze Meter Body		
Options			
Strainer	Required		
Flow Indicator			
Registration Units	Cubic feet		
Readability	Straight reading with low flow indicator		
Totalizer Digits	6		
Register Sweep Hand Revolution	10 cubic feet	100 cubic feet	

PART 3 EXECUTION

3.01 INSTALLATION

A. Installation Specification Reference: Manufacturer's Installation Instructions
City of Huntington Beach Standard Drawing 604

1-Sep-13

SECTION 02083.3 FIRE / DOMESTIC WATER METER ASSEMBLIES

PART 1 GENERAL

1.01 QUALITY ASSURANCE

Item	Test For	Test Standard	Frequency	First Test Paid By	Retests Paid By
Fire Service Type Water Meters	Operation	visual observation	1 test	City	Contractor

1.02 SUBMITTALS

Shop Drawings	Catalog Data	Installation Instructions	O&M Instructions	Manufacturer Statement of Responsibility	Certificate of Compliance	Certificate of Test Accuracy
yes	yes	yes	no	no	yes	yes

PART 2 PRODUCTS All brass and bronze shall comply with California Assembly Bill No. 1953, Chapter 853.

2.01 ACCEPTABLE MANUFACTURERS

A. Fire Meter Assembly: Sensus Metering Systems, Uniontown, PA, "Model Compact Fireline"

2.02 MATERIALS

A. Materials Specification Reference: AWWA C703, "Cold Water Meters-Fire Service Type"
UL Listing and FM approval required

B. Materials Schedule:

Meter

Location	In Vault			
Size	4 in	6 in	8 in	10 in
Meter Laying Length	33 in	45 in	53 in	68 in
Meter Flanges, ANSI Class 125	4 in Round	6 in Round	8 in Round	10 in Round
Meter Model	Compact Fireline			
Working Pressure	150 psi			
Fluid	Water			
Fluid Temperature (Max.)	80 F			

Flow Range (gpm)

AWWA Minimum Flow	3.0			
AWWA Minimum Flow Accuracy	95%<Minimum Flow<101%			
AWWA Normal Flow (gpm)	4 - 1000	4 - 2000	4 - 3500	4 - 5500
AWWA Normal Flow Accuracy	100% +/- 1.5% of actual flow			
AWWA Continuous Flow (gpm)	10	15	25	50
Repeatability				
Pressure Loss at Maximum Flow	8.4 psi at 1000 gpm	12.8 psi at 2000 gpm	12.9 psi at 3500 gpm	12.4 psi at 5500 gpm

Material

Main Casing	Waterworks Bronze			
Strainer	Ductile Iron			
Check Valve	Cast Iron			
Casing Bolts	Waterworks Bronze			
Meter Assembly Fasteners	316 Stainless on All Components			
Measuring Chambers	Thermoplastic Rotor			
Serial Number	Stamped on Meter Body Flange			
Weight (Lbs.)	480	950	1175	1840

Flow Indicator

Registration Units	Cubic feet
Readability	Straight reading with low flow indicator
Totalizer Digits	6
Register Type	Absolute Encoder Register(Touch Read) Pit Lid

Register Sweep Hand Revolution

Main Turbo Meter	100 cubic feet
By-Pass Turbo Meter	10 cubic feet

PART 3 EXECUTION

3.01 INSTALLATION

A. Installation Specification Reference: Manufacturer's Installation Instructions
City of Huntington Beach Standard Drawing 605

SECTION 02083.4 REMOTE REGISTRATION SYSTEMS

PART 1 GENERAL

1.01 QUALITY ASSURANCE

Item	Test For	Test Standard	Frequency	First Test Paid By	Retests Paid By
Remote Reading Meter Register	Operation	visual observation	1 test	City	contractor

1.02 SUBMITTALS

Shop Drawings	Catalog Data	Installation Instructions	O&M Instructions	Manufacturer Statement of Responsibility	Certificate of Compliance	Engineering Calculations
yes	yes	yes	no	no	no	no

PART 2 PRODUCTS

2.01 ACCEPTABLE MANUFACTURERS

A. Remote Reading Meter Registers: Register potted with ACLARA MTU / with AMI Endpoint and Mounting Bracket

2.02 MATERIALS

A. Materials Specification Reference: AWWA C707 Encoder-Type Remote-Registration Systems

B. Materials Schedule:

Registration cubic feet

PART 3 EXECUTION

3.01 INSTALLATION

A. Installation Specification Reference: Manufacturer's installation instructions
City of Huntington Beach Standard Drawings 601 through 605

1-Sep-13

SECTION 02084 PRECAST CONCRETE METER BOXES

PART 1 GENERAL

1.01 SUBMITTALS

Shop Drawings	Catalog Data	Installation Instructions	O&M Instructions	Manufacturer Statement of Responsibility	Certificate of Compliance	Engineering Calculations
no	yes	no	no	no	no	no

PART 2 PRODUCTS

2.01 ACCEPTABLE MANUFACTURERS

A. Parkway Rated Meter Boxes	DFW
B. Traffic Rated Meter Boxes	DFW

2.02 MATERIALS

A. Materials Specification Reference: **City of Huntington Beach Standard Drawings 601 through 603**

B. Materials Schedule:

Meter Box

Meter Size	3/4 in., 1-in. *	1-1/2 in., 2-in.
Box Size	12" x 20" x 12"	17" x 28" x 12"
Body	DFW #486WB4-12-BODY	DFW # 65C4-14-BODY
Cover	DFW # 486SAC-4A STAR-LID	DFW # 65C-4A STAR-LID

Mouseholes **Provide boxes without mouseholes.**

Sampling Tap **none**

PART 3 EXECUTION

3.01 INSTALLATION

A. Installation Specification Reference: **City of Huntington Beach Standard Drawings 601 through 603**

8-Feb-16

SECTION 02085.3 AIR AND VACUUM VALVES, WATER QUALITY SAMPLING CAN

PART 1 GENERAL

1.01 QUALITY ASSURANCE

Item	Test For	Test Standard
Air and Vacuum Valves	Operation	visual observation

1.02 SUBMITTALS

Shop Drawings	Catalog Data	Installation Instructions	O&M Instructions	Manufacturer Statement of Responsibility	Certificate of Compliance	Engineering Calculations
yes	yes	yes	yes	no	on request	no

PART 2 PRODUCTS

2.01 ACCEPTABLE MANUFACTURERS

A. 2-inch Air and Vacuum Release Valves

- A.R.I. Kfar Charuv 12932 Israel, Model D-040-C (preferred)
- APCO Willamette Valve & Primer Corp."No. 145 C", Schaumburg, IL

B. 4-inch Air and Vacuum Release Valves

- A.R.I. Kfar Charuv 12932 Israel, Model D-060-C HF NS (preferred)
- APCO Williamette Valve & Promer Corp. "No. 149 C", Schaumburg, IL

C. Ornamental Unit

- Low Density PE, Armorcast, North Hollywood, CA, Model P6002002 (preferred)
- Low Density PE, Armorcast, North Hollywood, CA, Model P6002010-SND

D. 12-inch diameter x 36-inch height, Water Testing Station Enclosure - Sandstone Finish

2.02 MATERIALS

A. Materials Specification Reference:
- AWWA C512 "Air Release, Air/Vacuum and Combination Air Valves for Water Service"
- AWWA M11 "Steel Pipe - A Guide for Design and Installation"

For pipelines greater than 18-inch diameter, placement of Air Release Vacuum Combination Valves shall be designed by a Civil Engineer

B. Materials Schedule:

Exposure	Outdoor
Fluid Conveyed	Water
Maximum Working Pressure	150 psi
Pressure Class	Class 150
Body Style	Single Body
Size	
Minimum	2-inch
Sizing for pipe	1-inch per 1-foot diameter of pipe (refer to AWWA M11, or AWWA M51.) Only even sizes are acceptable (2-inch, 4-inch, etc..).
Materials	
Body	Standard per AWWA C512
Trim	Standard per AWWA C512
Bolting Material	Type 316 Stainless Steel
End Style 2-inch Valve	Threaded
End Style 4-inch Valve	Flanged
Cover Outlet Configuration	Threaded
Valve Position	Upright
Shutoff Valve under Valve	Required
Discharge Pipe	Inverted U screened with 316 Stainless Steel to meet DHS Standards
Lining	Fusion Bonded Epoxy (See Section 9966.1)
Coating	Powder Coated Epoxy (See Section 9966.1)

3.01 INSTALLATION

A. Installation Specification Reference:
- Manufacturer's installation instructions
- City of Huntington Beach Standard Detail 610 and 611

SECTION 02085.4 BUTTERFLY VALVES LARGER THAN 12"

PART 1 GENERAL

1.01 QUALITY ASSURANCE

Item	Test For	Test Standard	Frequency	First Test Paid By	Retests Paid By
Hydrostatic Test	leakage	AWWA C504 Sec 5	1 test	contractor	contractor
Valve Lining	holidays	AWWA C550 Sec 5 - holiday free	each valve	contractor	contractor

1.02 SUBMITTALS

Shop Drawings	Catalog Data	Installation Instructions	O&M Instructions	Certificate of Compliance	Test Records
yes	yes	yes	yes	on request	yes

PART 2 PRODUCTS

2.01 ACCEPTABLE MANUFACTURERS

A. Rubber Seated Butterfly Valves	DeZurik Water Controls, Sartell Mn	Mueller Co. Decatur, Il Lineseal III	Henry Pratt Co., Aurora, IL, "Groundhog"

2.02 MATERIALS

A. Materials Specification Reference: **AWWA C504 Rubber Seated Butterfly Valves**

B. Materials Schedule:

Exposure	**Buried**
Fluid Conveyed	**Water**
Maximum Working Pressure	**150 psi**
Pressure Class	**150B**
Materials	
Body	**Cast Iron**
Valve Shaft	**Stainless Steel Type 304 with Stainless Steel Journals**
Discs	**Standard per AWWA C504**
Bolting Material	**Stainless Steel Type 316**
Style	**Hexagon head**
Discs	**Cast Iron, Ductile Iron or Ni-Resist**
Body Style	**Short Body**
End Style	**Match Adjoining Pipe. All valves to be fully restrained.**
Resilient Rubber Seat	**Seat in Body Design**
Disc Edge	**Solid Stainless Steel Type 316 Disc Edge**
Valve Position	**Horizontal (Horizontal Flow)**
Required Actuator	**Manual**
Valve Operation	**2-Inch AWWA Nut**
Actuator Location	**Buried**
Direction to Open	**Left (Counter-Clockwise)**
Type of Shaft Seal	**Standard per AWWA C504**
Lining	**Epoxy (9-16 mils per Section 09966.1)**
Coating	**Epoxy (4-6 mil per Section 09966.1)**

PART 3 EXECUTION

3.01 INSTALLATION

A. Installation Specification Reference: AWWA C504 Appendix A- Installation Operation & Maint of Rubber Seated Butterfly Valves
Manufacturers installation instructions.

B. **All bolts, studs, washers, and nuts per Specs. 02510.3.**

C. **Apply NO-OX-ID "A Special WW" grease and NO-OX-ID Protective Wrap on all buried fittings, per Specs. 02510.3.**

9/1/2013

SECTION 02085.9 RESILIENT SEATED GATE AND TAPPING VALVES 4"-12"

PART 1 GENERAL

1.01 QUALITY ASSURANCE

Item	Test For	Test Standard	Frequency	First Test Paid By	Retests Paid By
Hydrostatic Test	leakage	AWWA C509 Sec 6	1 test	Contractor	Contractor
Valve Lining	holidays	AWWA C550 Sec 5 - holiday free	each valve	Contractor	Contractor

1.02 SUBMITTALS

Shop Drawings	Catalog Data	Installation Instructions	O&M Instructions	Certificate of Compliance	Test Records
yes	yes	yes	yes	yes	yes

PART 2 PRODUCTS

2.01 ACCEPTABLE MANUFACTURERS

A. Resilient Wedge Gate Valves 12" and under	American Flow Control Co, "Series 2500" American Darling, Birmingham, AL	Mueller Co., Decatur, IL, 2360 Series	U.S. Pipe Two Chase Corporate Drive Suite # 200 Birmingham, AL 35244 "Metroseal 250"	
B. Tapping Sleeves 12" and under	Ford Meter Box Co., Wabash, IN "FTSS Stainless Steel"	JCM Industries, Inc., Nash, TX "Style 432"	Powerseal Corp., Wichita Falls, TX	Mueller Co. Decatur IL., "H-304"
C. Domestic Valve Box and Cover	Brooks Products Inc., "4TT" with "4TT Traffic", El Monte, CA	Eisel Enterprises Inc., "4TTVB" with "4TT-VC" Placentia, CA		
D. Reclaimed Valve Box and Cover	Brooks Products Inc., "3RT" with "3RT Traffic", El Monte, CA			
E. Valve Extension	Pipeline Products Inc., "FiberPlas", San Marcos, CA			

2.02 MATERIALS

A. Materials Specification Reference: AWWA C509 "Resilient Seat Gate Valves for Water Supply"
AWWA C515 "Reduced Wall Resilient Seated Gate Valves for Water Service"

B. Materials Schedule:

Exposure	Buried
Fluid Conveyed	Water
Minimum Pressure	Class 200
Materials	
Body	Standard per AWWA C509
Stem	Standard per AWWA C509
Bonnet Bolts	Type 316 Stainless Steel
Style	Hexagon head
Gates	Standard per AWWA C509
End Style	Match Adjoining Pipe Valves joining mains shall be flanged on main side.
Valve Position	Vertical (Horizontal Flow)
Valve Operation	2-Inch AWWA Nut unless noted otherwise on Standard Plan
Direction to Open	Left (Counter-Clockwise)
Required Actuator	Manual
Stem	Non Rising Stem, Bronze per AWWA C509
Type of Stem Seal	O-Ring
Wedge	Fully EPDM Encapsulated Wedge
Lining	Epoxy (9-16 mils per Section 09966.1)
Coating	Epoxy (4-6 mil per Section 09966.1)
Tapping Sleeve	Type 304 Stainless Steel with Type 304 Stainless Steel 3/4" test plug

PART 3 EXECUTION

3.01 INSTALLATION

A. Installation Specification Reference: Manufacturer's installation instructions
City of Huntington Beach Standard Plan 614A

B. All bolts, studs, washers, and nuts per specs. 02510.3

C. Apply NO-OX-ID "A Special WW" grease and NO-OX-ID Protective Wrap on all buried fittings, per Specs. 02510.3.

8-Feb-16

SECTION 02087.1 REDUCED PRESSURE PRINCIPLE DEVICES (RPPD DEVICES)

PART 1 GENERAL

1.01 QUALITY ASSURANCE

Item	Test For	Test Standard	Frequency	First Test Paid By	Retests Paid By
Hydrostatic test	leakage	close drip tight	1 test each valve	contractor	contractor
Backflow Preventer	backflow	Orange County Health Care Agency (Use certified tester)	1 test each valve	contractor	contractor

1.02 SUBMITTALS

Shop Drawings	Catalog Data	Installation Instructions	O&M Instructions	Manufacturer Statement of Responsibility	Certificate of Compliance	Plant Inspection
no	yes	yes	yes	yes	yes	no

PART 2 PRODUCTS

2.01 ACCEPTABLE MANUFACTURERS

A. Reduced Pressure Principle Devices — California Department of Public Health Approved Backflow Prevention Devices

2.02 MATERIALS

A. Materials Specification Reference: California Department of Public Health Approved Backflow Prevention Devices

B. Paint prohibited on name plates, serial numbers, test cocks, rising stem, relief valve openings and threaded components.

PART 3 EXECUTION

3.01 INSTALLATION

A. Installation Specification Reference: City of Huntington Beach Standard Plan 609 and 609A
Manufacturer's installation instructions

B. All backflow devices must be screened from view.

C. RPPD Enclosures

1. Acceptable Manufacturers
   BPDI, Phoenix, AZ

2. Material Specification Reference
   Guardshack GS - Series (GS1 - GS5)
   a. Color shall be Forest Green
   b. Powder coat, 1.5-2 mil per ASTM D2794

1-Sep-13

SECTION 02087.2 DOUBLE CHECK VALVE BACKFLOW PREVENTION ASSEMBLY

PART 1 GENERAL

1.01 QUALITY ASSURANCE

Item	Test For	Test Standard	Frequency	First Test Paid By	Retests Paid By
Hydrostatic test	leakage	close drip tight	1 test each valve	contractor	contractor
Backflow Preventer	backflow	Orange County Health Care Agency (Use certified tester)	1 test each valve	contractor	contractor

1.02 SUBMITTALS

Shop Drawings	Catalog Data	Installation Instructions	O&M Instructions	Manufacturer Statement of Responsibility	Certificate of Compliance	Plant Inspection
no	yes	yes	yes	yes	yes	no

PART 2 PRODUCTS

2.01 ACCEPTABLE MANUFACTURERS

A. Double Check Detector Assembly (DCDA): California Department of Public Health Approved Backflow Prevention Devices

2.02 MATERIALS

A. Materials Specification Reference: California Department of Public Health Approved Backflow Prevention Devices

B. Materials Schedule:

By-Pass Meter 3/4" Non-Touch Read, Per Specifications Section 02083.1

PART 3 EXECUTION

3.01 INSTALLATION

A. Installation Specification Reference: City of Huntington Beach Standard Plan 618
Manufacturer's installation instructions

B. Painting Paint prohibited on name plates, serial numbers, test cocks, rising stem, relief valve openings and threaded components.

1. Color of OS&Y valve downstream of last check valve, and FCD (if equipped), shall be OSHA Red.
2. Color of remainder of DCDA assembly to be OSHA Red.
3. Powder coat, 1.5-2 mil per ASTM D2794

SECTION 02088 COUPLINGS AND EXPANSION JOINTS

PART 1 GENERAL

1.01 QUALITY ASSURANCE

Item	Test For	Test Standard	Frequency	First Test Paid By	Retests Paid By
Couplings	Thrust Restraint	Visual inspection of thrust restraint system	1 test	City	City

1.02 SUBMITTALS

Shop Drawings	Catalog Data	Installation Instructions	brazed Instructions	Manufacturer Statement of Responsibility	Certificate of Compliance	Engineering Calculations
no	yes	yes	no	no	no	thrust restraint

PART 2 PRODUCTS

2.01 ACCEPTABLE MANUFACTURERS

A. Coupling Adaptor - Flanged (non restrained)	EBAA Iron (E-Z Flange), Eastland TX	JCM Industries, Inc. (300 Series), Nash, TX	Smith Blair, Inc. (900 Series), Texarkana, AR
B. Coupling Gaskets - Sleeve Type	Baker Coupling Co., Inc. (200 Series), Los Angeles, CA	Dresser Industries (Plain Grade 27), Bradford, PA	Smith Blair, Inc. (900 Series), Texarkana, AR
C. Grooved-Type Split Couplings	ITT-Grinnell Valve Co., Inc., King of Prussioa, PA	Powerseal Pipeline Products Corp., Wichita Falls, TX	Victaulic Co. of America Style 77, Easton, PA
D. Sleeve-Type Flexible Couplings - 12" Min Barrel	Romac Industries, Inc. (Style 501), Bothell, WA	Dresser Industries, (Style 38), Bradford, PA	Smith Blair, Inc. (400 Series), Texarkana, AR
E. Expansion Joints	Dresser Industries (Style 63), Bradford, PA	EBAA Iron, Inc. (Flex-Tend), Eastland, TX	Smith Blair, Inc., (600 Series), Texarkana, AR
F. Grease and Wrap	Sanchem Inc. (NO-OX-ID "A Special WW" grease and NO-OX-ID Protective Wrap) Chicago, IL		

2.02 MATERIALS

A. Materials Specification Reference:	Use approved manufacturer
Flanged Coupling Adaptors	AWWA C219 Bolted Sleeve-Type Couplings for Plain End Pipe
Grooved-Type Split Couplings	AWWA C606, Grooved and Shouldered Joints
Sleeve-Type Flexible Couplings	AWWA C219 Bolted Sleeve-Type Couplings for Plain End Pipe

B. Materials Schedule:

Coupling Adaptor - Flanged		
Location		
Body and Bolting Materials	Not Buried - Steel	Buried - 316 Stainless steel
Size	12 inches and smaller	
Working Pressure	150 psi	
Grooved Type Split Couplings		
Location		
Body and Bolting Materials	Not Buried - Steel	Buried - 316 Stainless steel
Size	12 inches and smaller	
Working Pressure	150 psi	
Sleeve Type Flexible Couplings		
Location		Manufacturer Issued
Materials	Not Buried - Steel	Buried - 316 Stainless steel
Size	All sizes	
Working Pressure	150 psi	
Expansion Joints		
Exposure	Not Buried - Steel	Manufacturer Issued
Materials	All sizes	Buried - 316 Stainless steel
Working Pressure	150 psi	
Bolts, studs, washers and nuts	All bolts, studs, washers, and nuts shall be 316 Stainless Steel per ASTM F593 Grade G or H or ASTM F594 Grade G or H.	

PART 3 EXECUTION

3.01 INSTALLATION

A. Installation Specification Reference:	Manufacturer's installation instructions

B. Provide thrust restraint per approved calculations or catalog data.

C. Apply NO-OX-ID "A Special WW" grease and NO-OX-ID Protective Wrap on all buried fittings, per Specs. 02510.3

1-Mar-19

SECTION 02224 ABANDONMENT OF CONDUITS, PIPE AND STRUCTURES

PART 1 GENERAL

1.01 QUALITY ASSURANCE

A.

Item	Test For	Test Standard	Frequency	First Test Paid By	Retests Paid By
Abandonment of existing utility	Field Pressure in plug or cap	**Greenbook Std Spec 306 1.4.5**	**as directed**	**contractor**	**contractor**

B. Do not disturb existing water lines without a Public Works Inspector present. Do not operate valves without written permission from Inspector. Normally, only the Utilities Division will operate valves.

1.02 SUBMITTALS

A.

Shop Drawings	Catalog Data	Installation Instructions	O&M Instructions	Manufacturer Statement of Responsibility	Potholing data	Proof of Asbestos Disposal
no	**no**	**no**	**no**	**no**	**no**	**Submit proof of ACP pipe disposal per SCAQMD Asbestos Demolition Requirement**

B. **Shutdown schedule** shall be submitted 72 hours before depressurizing or tapping existing pipelines or manholes. Show time to complete connections, Owner's inspection, testing and disinfection within specified shutdown period.

C. **Before removing pipes and utilities to be abandoned**, provide highline hoses, water trucks and fittings as directed by the Utilities Manager to maintain service.

PART 2 PRODUCTS

not used

PART 3 EXECUTION

3.01 EXECUTION

A.

Demolition Specification Reference:	**SCAQMD Rule 1403 - Asbestos Demolition Requirements**
	City of Huntington Beach Standard Plan 613

B. Existing dewatered pipe may be abandoned in place per requirements of City Std. 613.

C. Existing non-asbestos pipe or conduit may be removed to landfill, in which case, backfill and pavement repair shall meet City standards.

D. Stockpiling of removed non-asbestos materials shall be temporary, outside of vehicle right of way in a location that will not cause a safety hazard.

E. Do not cut, trim, mill or disturb asbestos cement pipe. Remove ACP to nearest joint when connecting PVC to ACP using a suitable adaptor. Dispose of asbestos per SCAQMD Rule 1403. Under special circumstances, and with the permission of the Public Works Inspector, snap cutters may be used to cut ACP pipe.

F. Where services are abandoned, Remove meter box. Salvage and return meter to inspector. Install plug in service saddle. Where no saddle is present, install a full circle repair clamp.

G. Following removal, repair surrounding improvements to preconstruction conditions or better, to Public Works Inspector's satisfaction.

H. To abandon pipelines with diameters greater than 12", the abandonment method must be approved by the City Engineer. Refer to City Std. 613.

SECTION 02321 TRENCHING

PART 1 GENERAL

1.01 QUALITY ASSURANCE

	Item	Test For	Test Standard	Frequency	First Test Paid By	Retests Paid By
A.	Bedding Material	Sand Equivalent	Caltrans Test 217	as directed	City	Contractor
B.	Bedding Material	Permeability	ASTM D2434	as directed	City	Contractor
C.	Backfill Sampling		ASTM D75	as directed	City	Contractor
D.	Utility Backfill	Expansion Index	UBC Std Test 18-2	as directed	City	Contractor
E.	Utility Backfill	Compaction	ASTM D1557 (AASHTO T180) modified Proctor	as directed	City	Contractor
F.	Utility Backfill	In Place Density	ASTM D1556 (sand cone) or ASTM D2937 (drive tube)	as directed	City	Contractor
G.	Utility Backfill	In Place Density Cohesionless Soils	ASTM D2049	as directed	City	Contractor

1.02 SUBMITTALS

	Shop Drawings	Catalog Data	Installation Instructions	O&M Instructions	Manufacturer Statement of Responsibility	Certificate of Compliance	Engineering Calculations
A.	shoring & bracing	shoring & bracing	shoring & bracing	no	no	Compaction test soils report with Engineer's seal	shoring & bracing

B. Shoring and bracing submittals for worker protection shall be submitted to OSHA as required by law

PART 2 PRODUCTS

2.01 ACCEPTABLE MANUFACTURERS

A. Locator Tape	The Allen Marking System	Reef Industries, Inc. Terra Tape, Houston, TX

2.02 MATERIALS

A. Materials Specification Reference: **Standard Specifications for Public Works Construction Section 306**

B. Materials Schedule

Trenching

Backfill: See Trenching and Resurfacing Detail Std Plan 606

Maximum Rock Size: **3** inches

Thrust blocks

Where required: **3** degree bends and larger on pressure pipe

Concrete class: **450-C-2000 per Green Book Section 201**

PART 3 EXECUTION

3.01 INSTALLATION

Installation Specification Reference: **Standard Specifications for Public Works Construction Section 306**
Cal OSHA Safety Orders
City of Huntington Beach Standard Plan 606

3.02 Installation Schedule

Pavement cuts	**sawcut only**
Dewatering depth	**12" below bottom of excavation** **Do not use sewers as drains for dewatering decant**
Minimum cover	**Refer to Std. Plan 600 sheet 1 of 8**
Maximum length of open trench	**500' or 1 day's installed length, whichever is greater**
Maximum backfill lift	**3' maximum**
Water consolidation by flooding	**OK in trench zone only for 2-ft maximum lifts**
Water consolidation by jetting	**OK in trench zone only for 2-ft maximum lifts**
Protection of trench (working hours)	Use barricades, barriers and striping per plans approved by traffic engineer
Protection of trench (off-work hours)	**Use steel plates (thickness as required) pinned or tack welded per WATCH handbook**

1-Sep-13

PART 1 GENERAL

1.01 QUALITY ASSURANCE

	Item	Test For	Test Standard	Frequency	First Test Paid By	Retests Paid By
A.	Backfill Sampling	Sampling Procedure	ASTM D75	as directed	Contractor	Contractor
B.	Structure Backfill	Gradation	ASTM C136	as directed	Contractor	Contractor
C.	Structure Backfill	Sand Equivalent	Caltrans Test 217	as directed	Contractor	Contractor
D.	Structure Backfill	Expansion Index	UBC Std Test 18-2	as directed	Contractor	Contractor
E.	Structure Backfill	Compaction	ASTM D1557 (AASHTO T180) modified Proctor	as directed	Contractor	Contractor

1.02 SUBMITTALS

	Shop Drawings	Catalog Data	Installation Instructions	O&M Instructions	Manufacturer Statement of Responsibility	Certificate of Compliance	Engineering Calculations
A.	shoring & bracing	shoring & bracing	shoring & bracing	no	no	no	shoring & bracing

B. Shoring and bracing submittals for worker protection shall be submitted to OSHA as required by law

PART 2 PRODUCTS

2.01 MATERIALS

A. Materials Specification Reference: **Standard Specifications for Public Works Construction Section 301**

B. Materials Schedule:

Structure backfill

Gradation

Sieve size	% passing
No. 4	95 - 100
No. 30	26 - 60
No. 100	2 - 10

Minimum sand equivalent **25**

Maximum expansion index **30**

Compaction **90%** of maximum dry density

Pervious backfill

Gradation

Sieve size	% passing
3/4"	100
3/8"	80-100
No. 100	0-8
No. 200	0-3

Minimum sand equivalent **60 passing #4 sieve**

PART 3 EXECUTION

3.01 INSTALLATION

A. Installation Specification Reference: **Standard Specifications for Public Works Construction Section 301**
City of Huntington Beach Standard Plan 606

B. Installation Schedule

Dewatering depth **Dewater to 2' below bottom of excavation.**

Overexcavation **Overexcavate to minimum 2' or depth of fill below footing.**

Temporary shoring required for excavation over **5 ft or as required under unstable soil conditions.**

Design equivalent fluid pressure **40** pcf

Abandoning utilities in foundation area **Cut off to 4' outside edge of foundation.**
Utilities 2' or more below footing may be filled with concrete.
Plug ends for 5'. Cap pressure lines.

Hand excavation **Hand excavate when within 5' of existing structures.**

Material disposal **Dispose to off-site location furnished by Contractor**

Maximum backfill lift **8** " maximum lift

Water consolidation by flooding **not OK**

Water consolidation by jetting **OK**

Finished subgrade tolerance **+/- 0.10'**

SECTION 02445 BORING OR JACKING CONDUITS

PART 1 GENERAL

1.01 QUALITY ASSURANCE

	Item	Test For	Test Standard	Frequency	First Test Paid By	Retests Paid By
A.	Line and grade	accuracy	standard survey methods	as required	contractor	contractor

1.02 SUBMITTALS

	Shop Drawings	Potholing data	Engineering Calculations
A. Jacking Pit	Jacking Pit Bracing	required	Jacking Pit Bracing design per City of Los Angeles Std S254
B. Casing or Conduit	Casing or Conduit and Jacking Head, Support Blocks, Carrier Pipe Bracing	required	not required

C. **Shutdown schedule** shall be submitted 72 hours before depressurizing or tapping existing pipelines. Show time to complete connections, Owner's inspection, testing and disinfection within specified shutdown period.

D. **Before removing pipes and utilities to be abandoned**, provide highline hoses, water trucks and fittings as directed by the Public Works Inspector to maintain service.

PART 2 PRODUCTS

2.01 APPROVED MANUFACTURERS

A. Bentonite	Black Hills	Imacco-Gel
B. Casing Insulators	PSI, Pipeline Seal and Insulator Inc., Model S8G-2	
C. Link Seals	PSI, Pipeline Seal and Insulator Inc., Model S-316	
D. End Seal	PSI, Pipeline Seal and Insulator Inc., Model S	

2.02 MATERIALS

Steel Casing: Butt Welded Steel Sheet or Plate per ASTM A245 or ASTM A283

Water Pipe Size	4 in	6 in	8 in	12 in
Minimum Casing ID*	12.00 in	16.00 in	18.00 in	24.00 in
Minimum Wall Thickness*	0.375 in	0.375 in	0.375 in	0.375 in

*These are minimums. Licensing or permitting agency standards may be more rigorous.

Carrier Pipe Support: Stainless Steel Casing Insulators w/ Stainless Steel fasteners

Carrier Pipe: DIP with approved restrained joints, and Polyethylene Wrap per C105

Annular Backfill: Sand passing 100 sieve, and shall comply with Greenbook Section 200-1.5.3

PART 3 EXECUTION

3.01 INSTALLATION

A. Installation Specification Reference: Standard Specifications for Public Works Construction Section 306.2; City of Huntington Beach Standard Plan 622

B. Before beginning work, secure permits from Caltrans, OCEMA, City of Huntington Beach, BNSF or UP as required.

C. Before beginning work, secure Cal OSHA Division of Industrial Safety classification for bores over 30 inch diameter.

D. Before beginning work, conduct all safety meetings per California Division of Industrial Safety requirements.

E. Before beginning work, pothole all utilities shown which may conflict if not located as shown. Failure to pothole will severely limit recovery for changes in work required due to inaccurate utility locations on plans.

F. If casing and carrier are not installed in one continuous operation, bulkhead portals and backfill and reexcavate jacking and receiving pits

G. Excavate only within jacking head to prevent caving. Do not excavate in advance of head.

H. Jacking bands are required on pipe ends receiving jacking thrust.

I. Seal ends of annular spaces with both Link Seals and End Seals.

J. Backfill jacking and receiving pits as shown in Section 02321, complete with pipe bedding and backfill required for carrier pipe materials.

K. On County, State or Federal property, Agency standards shall apply if stricter than City Standards.

SECTION 02510.1 DUCTILE IRON PIPE AND FITTINGS

PART 1 GENERAL

1.01 QUALITY ASSURANCE

Item	Test For	Test Standard	Frequency	First Test Paid By	Retests Paid By
Ductile Iron Pipe	Field Pressure	AWWA C600	all pipe	Contractor	Contractor

1.02 SUBMITTALS

Shop Drawings	Catalog Data	Installation Instructions	Foundry Record Transcripts	Certificate of Compliance
yes	required	DIPRA Guide for Installation of Ductile Iron Pipe	Required per AWWA C151 Sect 51-5	Required per AWWA C151 Sect 51-5

PART 2 PRODUCTS

2.01 ACCEPTABLE MANUFACTURERS

A. Ductile Iron Pipe		American Cast Iron Pipe Company, Birmingham, AL	Griffin Pipe Products, Council Bluffs Iowa	McWane Ductile, Provo, UT		United States Pipe and Foundry Co., Union City, CA
B. Ductile Iron Pipe Fittings	SIP Industries, Fontana CA	McWane Cast Iron Pipe Company, Birmingham, AL	Star Pipe Products Houston Tx	Sigma Corporation Cream Ridge NJ	Tyler Pipe Industries "Union-Tite," Tyler, TX	United States Pipe and Foundry Company "Tyton", Birmingham, AL
C. Rubber Gasket Joints for DIP		Mechanical joint per ANSI/AWWA C111, or Fastite or Tyton Push-On Joints				
D. Flange Gaskets		Garlock	Tripac	Johns Manville		Klinger
E. Insulating Bushings, Unions, Flange Insulation Kits, Casing Insulators		Central Plastics Co., Shawnee, OK		EPCO Sales Inc., Cleveland, OH		Pipeline Coating and Engineering Co.
F. Polyethylene Encasement		Northtown Co., Huntington Beach, CA				
G. Tape for Polyethylene Encasement		J-M Manufacturing Co., Livingston, NJ, No V-10		Scotchwrap (3M), St Paul MN, No 50		Tapecoat Co., Evanston, IL, CT

2.02 MATERIALS

A. Materials Specification Reference: Std Specifications for Public Works Const. Section 207-9

B. Materials Schedule:

Fluid Conveyed	Water
Working Pressure	150 psi
Pipe Class	Standard Thickness Class per AWWA C150
Ends	Beveled plain-end x bell on standard length pipe Beveled plain end x beveled plain end on shorts
Joints	AWWA C111, AWWA C115
Fitting Material	AWWA C110 or AWWA C153, Ductile Iron Fittings
Flanges	Flanges shall be Ductile Iron only, Per ANSI/AWWA C115
Bolts and Studs	Type 316 Stainless Steel per ASTM F593 Grade G or H Project ends of bolts 1/4 to 3/8 inch beyond nut
Nuts and Washers	Type 316 Stainless Steel per ASTM F594 Grade G or H, Provide 1 washer per nut.
Flange Gaskets	Ring type, 1/8" thick, non-asbestos per AWWA C207 Section 4.1.3
Gaskets	SBR. NBR (Buna-N Nitrile) are required in hydrocarbon contaminated soils.
Lining	AWWA C104, Standard Thickness Cement Mortar Lining
Seal Coat	Asphaltic Material
Polyethylene Encasement	
Color	V-Bio Enhanced Polyethylene Encasement,
Tape	2 inch width polyethylene tape

PART 3 EXECUTION

3.01 INSTALLATION

A. Installation Specification Reference: DIPRA Guide for Installation of Ductile Iron Pipe

B. Allowable Deflection: 5-degrees for DI pipe and fittings <= 12-inch diameter

C. Test Schedule

Test Pressure: 150 psi

Allowable Leakage	4 in	6 in	8 in	12 in
gph/1000ft per AWWA C600	0.33	0.49	0.66	1.00

D. PE Encasement Installation Method: AWWA C105 Method A

E. Joint Bonding & Cathodic Protection: Exothermic welding of jumper wires required for all continuous sections of DIP and fittings. See plans 630-638 for joint bonding and anode requirements.

F. Grease and Wrap: Apply NO-OX-ID "A Special WW" Grease and NO-OX-ID Protective Wrap on all buried fasteners.

1-Mar-19

SECTION 02510.2 FABRICATED STEEL WATER PIPE

PART 1 GENERAL

1.01 QUALITY ASSURANCE

Item	Test For	Test Standard	Frequency	First Test Paid By	Retests Paid By
Steel Water Pipe	Field Pressure	Std Spec 306-1.4.5	1 test	contractor	contractor
Welds	Shop Hydrostatic test	ANSI/AWWA C200	1 test	contractor	contractor

1.02 SUBMITTALS

Shop Drawings	Catalog Data	Installation Instructions	Certificate of Compliance	Engineering Calculations
fabrication drawings and lay sheets	yes	yes	required per AWWA C200	required for fittings per AWWA M11

PART 2 PRODUCTS

2.01 ACCEPTABLE MANUFACTURERS

A. Fabricated Steel Water Pipe	Ameron Inc., Rancho Cucamonga, CA	Northwest Pipe Company, Riverside, CA

2.02 MATERIALS

A. Materials Specification Reference: **Standard Specifications for Public Works Construction Sec 207.10.2**

B. Materials Schedule:

Exposure	**Buried and Above Ground**
Fluid Conveyed	**Water**
Material	
Steel Material	**AWWA C200**
Design	
Working Pressure	**150 psi**
Design Stress in Pipe Wall	**15000 psi**
Pipe Class	**150 psi design**
Minimum Wall Thickness	**0.1875 in**
Thickness Variation	**The allowable thickness variation from section 4.7.2 of AWWA C200 shall be added to the design wall thickness of the pipe.**
Defect Allowance	**The defect allowance as defined by Section 4.2.2 of AWWA C200 shall be added to the design wall thickness of the pipe.**
Joints	
Rubber Gasketed Push-On Joint	**Gasket shall be SBR, or NBR (Buna-N Nitrile) shall be used in Hydrocarbon contaminated soil in accordance with ASTM D-2000.**
Welded Joints	**Lap Welded Slip Joints**
Flanges	**AWWA Class D (150-175 psi)**
Bolts and Studs	**Type 316 Stainless Steel per ASTM F593 Grade G or H** **Project ends of bolts 1/4 to 3/8 inch beyond nut**
Nuts and Washers	**Type 316 Stainless Steel per ASTM F594 Grade G or H, Provide 2 washers per nut & bolt.**
Flange Gaskets	**Ring type, 1/8" thick, non-asbestos per AWWA C207 Section 4.1.3**
Lining	
Cement Mortar Lining (AWWA C205)	**Standard Thickness**
Other Approved Lining	**none**
Coating of Buried Pipelines	
Cement Coating	**AWWA C205, 1-inch minimum**
Dielectric Coatings	**AWWA C214, AWWA C215, AWWA C216**
Coating of Exposed Pipelines	**3 Coat Epoxy Urethane System (AWWA C218 System 4-91)**

PART 3 EXECUTION

3.01 INSTALLATION

A. Installation Specification Reference: **Standard Specifications for Public Works Construction Sec 306.1.2**

B. Test Pressure **150 psi**

C. Allowable Leakage

	12 in.	16 in.	20 in.	24 in.	30 in.	36 in.
gph/1000 ft per AWWA M11	2.36	3.15	3.94	4.73	5.19	7.1

D. Minimum Cover **48 in**

1-Mar-19

SECTION 02510.3 FASTENERS AND TAPE WRAP

PART 1 GENERAL

1.01 SUBMITTALS

Shop Drawings	Catalog Data	Installation Instructions	O&M Instructions	Manufacturer Statement of Responsibility	Certificate of Compliance
no	yes	no	no	no	on request

PART 2 PRODUCTS

2.01 ACCEPTABLE MANUFACTURERS

A. Fasteners	Tripac Fasteners, Corona CA	Pacific Coast Bolt Corp, Santa Fe Springs CA
B. Tape Wrap	Sanchem, Chicago IL	The Trenton Corporation, Ann Arbor MI

2.02 MATERIALS

Materials Specification Reference:	
A. Bolts	T-316, 316, per ASTM F593 Grade G or H
Nuts	T-316, 316, per ASTM F594 Grade G or H
Washers	T-316 Stainless Steel Washers
T-Heads	T-316 Stainless Steel

B. Standard Tape Wrap — **NO-OX-ID "A" SPECIAL soft grease type rust preventive, with wax tape coating, with Polyethylene Encasement per AWWA C105 outer layer.**

Alternative Tape Wrap — **AWWA C217 Three layer Wax Tape System consisting of , Trenton Wax Tape Primer, Trenton #1 Wax Tape or #2 Wax Tape, and polyethylene over tape.**

C. Anti Seize — **Use Anti-seize on SS316 fasteners to prevent gauling.**

PART 3 EXECUTION

3.01 INSTALLATION

A. Fasteners — **Washers are required on the nut.**

B. Tape Wrap — **Tape coat all fasteners, flanges, MJ Glands, restrained joint hardware, Couplings, and tapping saddles and corporation stops. Follow the manufacturer's installation procedure. Wax tape layer shall be installed with a 50% minimum overlap.**

1-Mar-19

SECTION 02510.5 **RESTRAINED JOINTS FOR DIP AND PVC**

PART 1 GENERAL

1.01 QUALITY ASSURANCE

Item	Test For	Test Standard	Frequency	First Test Paid By	Retests Paid By
Restrained Joint Mechanisms for DIP and PVC	Field Pressure (200 psi)	AWWA C605 for PVC and AWWA C600 for DIP	1 test	contractor	contractor

1.02 SUBMITTALS

Shop Drawings	Catalog Data	Installation Instructions	O&M Instructions	Certificate of Compliance	Engineering Calculations
yes	yes	yes	no	yes	for ≤ 12-inch pipe

PART 2 PRODUCTS

2.01 ACCEPTABLE MANUFACTURERS

A. Restrained Joint Mechanism for PVC pipe to DI MJ fittings	EBAA Iron Inc. Series 2000PV	The Ford Meter Box Company, Uni-Flange Retainer URF1500-C-x		Star Pipe Products, Stargrip Series 4000
B. Restrained Joint Mechanism for DI pipe to DI MJ fittings	EBAA Iron Inc. Series 1100	The Ford Meter Box Company, Uni-Flange Series 1400	Star Pipe Products, Series 3000	
C. Ductile Iron Restrained Joint Systems	US Pipe Co., TR-FLEX	American Cast Iron Pipe Co., FLEX-RING	Pacific States Cast Iron Pipe Co., THRUST LOCK	Griffin Pipe Products Co., SNAP-LOCK
D. PVC Bell to PVC Spigot	EBAA Iron Inc. Series 1600, and Series 2800	The Ford Meter Box Company, Uni-Flange Series 1390	Star Pipe Products, Series 4100P	
E. DIP Bell to DIP Spigot	EBAA Iron Inc. Series 1700		The Ford Meter Box Company, Uni-Flange Series 1450	

2.02 Specification

A. Restrained Joint Mechanism for PVC pipe to DI MJ fittings	The retainer mechanism shall be incorporated into the design of the follower gland and shall be compatible with AWWA C111/A21.11. All components shall be manufactured of ductile iron in accordance with ASTM A536 grade 65-45-12. The gland shall be coated with fusion bonded epoxy or powder coated polyester. Restraint shall consist of a plurality of individually activated gripping wedges, with torque limiting actuating screws. The device shall have a working pressure equal to that of the pipe. The mechanical joint restraint shall meet or exceed the requirements of ASTM F1674 of the latest revision.
B. Restrained Flanged Coupling Adaptors for PVC, and DI Pipe	The flanged coupling adaptor shall be manufactured of ductile iron in accordance with ASTM A536 grade 65-45-12. The restraint ring shall be coated with fusion bonded epoxy or powder coated polyester. The restraint for the flanged coupling adaptor shall consist of a plurality of individually activated gripping wedges, with torque limiting actuating screws. The device shall have a working pressure equal to that of the pipe. For DI the flanged coupling adaptor shall have a minimum safety factor of 2:1. The flanged coupling adaptor shall have a minimum joint deflection of 1.5 degrees in all sizes.
C. Restrained Joint Mechanism for DI pipe to DI MJ fittings	The retainer mechanism shall be incorporated into the design of the follower gland and shall be compatible with AWWA C111/A21.11. All components shall be manufactured of ductile iron in accordance with ASTM A536 grade 65-45-12. The gland shall be coated with fusion bonded epoxy or powder coated polyester. Restraint shall consist of a plurality of individually activated gripping wedges, with torque limiting actuating screws. The device shall have a working pressure equal to that of the pipe, and a minimum factor of safety of 2:1 in all sizes.
D. Restrained Joint Mechanisms for PVC Bells to PVC Spigot	All components shall be manufactured of ductile iron in accordance with ASTM A536 grade 65-45-12. The gland shall be coated with fusion bonded epoxy or powder coated polyester. Restraint shall consist of a serrated ring or a plurality of individually activated gripping wedges with torque limiting actuating screws. The device shall have a working pressure equal to that of the pipe. All connecting rods must clear the pipe bell without bending the connecting rods.

2.03 Materials Schedule:

A. Bolts and Studs	Type 316 Stainless Steel per ASTM F593 Grade G or H, Project ends of bolts 1/4 to 3/8 inch beyond nut
B. Nuts and Washers	Type 316 Stainless Steel per ASTM F594 Grade G or H, Provide 1 washer per nut.

PART 3 EXECUTION

3.01 INSTALLATION

A. Installation Specification Reference: Manufacturer's installation instructions, and Water Division Standard Plan No 606

B. Test Pressure	150 psi
C. Marking Tape	6-inch Wide Plastic Tape labeled "CAUTION RESTRAINED JOINT PIPELINE" shall be placed over the entire length of Restrained Joint Pipeline.
D. Polyethylene Encasement	All restrained joint devises shall be polyethylene encased per AWWA C105/A21.5, and secured using 2-inch wide polyethylene tape.
E. Grease and Wrap	Apply NO-OX-ID "A Special WW" Grease and Protective Wrap on all buried fittings including restrained joint mechanisms.

SECTION 02510.8 UNDERGROUND SERVICE LINE VALVES AND FITTINGS

PART 1 GENERAL

1.01 SUBMITTALS

Shop Drawings	Catalog Data	Installation Instructions	O&M Instructions	Manufacturer Statement of Responsibility	Certificate of Compliance	Engineering Calculations
no	yes	no	no	no	yes	no

PART 2 PRODUCTS All brass and bronze shall comply with California Assembly Bill No. 1953, Chapter 853.

2.01 ACCEPTABLE MANUFACTURERS

A. Curb and Corporation Stops - 1"	Ford Meter Box Co. "FB1001-4NL", 1" Copper "FB1000-4NL", Wabash, IN	James Jones Co. 1" CCX Compression for Copper J-1937, El Monte, CA	Mueller Co., A Grinnell Co., "NP25008/NB25008", Decatur, IL
B. Curb and Corporation Stops - 2"	Ford Meter Box Co. "FB 1001-7NL", 2" Copper "FB-1000-7NL", Wabash, IN	James Jones Co. 2" CCX Compression for Copper J-1937, El Monte, CA	Mueller Co., A Grinnell Co., "NP25008/NB25008", Decatur, IL
C. Curb and Corp Stops - Contaminated Soils	Ford Meter Box Co. 1" Copper "FB-600-4NL", 2" Copper "FB-600-7NL", Wabash, IN		Mueller Co., A Grinnell Co., "NP25000", Decatur, IL
D. Service Saddles (AC, D.I., C.I. Pipe)	Ford Meter Box Co. "202B", Wabash, IN	James Jones Co."J-979" El Monte, CA	Mueller Co., A Grinnell Co., "NBR2B", Decatur, IL
Service Repair Clamps	Ford Meter Co. "FS1 (single band) or FS2 (double band)		
E. Service Saddles (PVC Pipe)	Ford Meter Box Co. "S90NL" (10" & 12" only), Wabash, IN	James Jones Co. "J-996" El Monte, CA	Mueller Co., A Grinnell Co., "NH13000 Series", Decatur, IL
Service Repair Clamps	Ford Meter Co. "FS1 (single band) or FS2 (double band)		
F. Meter Couplings and Yokes - 1"	Ford Meter Box Co. "L38-44NL", Wabash, IN	James Jones Co. "J-132" El Monte, CA	Mueller Co., A Grinnell Co., "NH10892", Decatur, IL
G. Meter Couplings and Yokes - 3/4"	Ford Meter Box Co. "L38-23NL", Wabash, IN	James Jones Co. "J-132" El Monte, CA	Mueller Co., A Grinnell Co., "NJJ129", Decatur, IL
H. Angle Service Fittings 90º	Ford Meter Box Co. "L66-77NL", Wabash, IN	James Jones Co. "J1552"w/ Pack-Joint, El Monte, CA	Mueller Co., A Grinnell Co., "NH10892", Decatur, IL
I. Bronze Meter Adaptor - 1" X 3/4"	Ford Meter Box Co., "A34NL" Wabash, IN		Mueller Co., A Grimmell Co., "NH10889", Decatur, IL
J. Meter Flanges - 1-1/2"	Ford Meter Box Co. "CF31-66NL", Wabash, IN	James Jones Co. "J-129 El Monte, CA	Mueller Co., A Grinnell Co., "NJJ129", Decatur, IL
K. Meter Flanges - 2"	Ford Meter Box Co. "CF31-77NL", Wabash, IN	James Jones Co. "J-1963W" w/ Pack-Joint, El Monte, CA	Mueller Co., A Grinnell Co., "NJJ129", Decatur, IL
L. Angle Meter Stop - 1"	Ford Meter Box Co. "BA63-444WNL", 1" Copper "BA43-444WNL", Wabash, IN	James Jones Co. "J-1963W" w/ Pack-Joint, El Monte, CA	Mueller Co., A Grimmell Co., "300", Decatur, IL
M. Angle Meter Stop - 2" x 1-1/2"	Ford Meter Box Co. "FV63-777WNL", 2" Copper "FV43-777WNL", Wabash, IN		Mueller Co., A Grinnell Co., "NH14286", Decatur, IL
N. Angle Meter Stop - 2"	Ford Meter Box Co. "FV63-777WNL", 2" Copper "FV43-777WNL", Wabash, IN	James Jones Co. "J-1525-F" w/ Pack-Joint, El Monte, CA	Mueller Co., A Grinnell Co., "NH14276", "NH14286", Decatur, IL
O. Ball Valves (Brass) w/ ss handle	Kitz 56-034 (3/4"), 56-100 (1")		Kitz 58-112 (1-1/2"), 58-120 (2")
P. Bolts & Nuts - 1-1/2" & 2"	Tri-Pac Fasteners, 5/8" x 2" Long, Brass, Hex Head, Fountain Valley, CA		Rainbow, 5/8" x 2" Long, Brass, Hex Head, Santa Ana, CA
Q. Gaskets - 3/4" & 1"	OG Supply, 1/8" Rubber, Cloth Inserted, Ontario, CA		
R. Gaskets - 1-1/2" & 2"	OG Supply, 1/8" Rubber, Drop-In, Cloth Inserted, Ontario, CA		
S. Fittings for Copper Pipe	AY McDonald Mfg. Co., Dubuque, IA	Ford Meter Box Co., Wabash, IN	James Jones Co., El Monte, CA
T. Plastic Coated Copper Tube	Streamline Copper Type K		

2.02 MATERIALS

A. Materials Specification Reference: **AWWA C800 "Underground Service Line Valves and Fittings"**
AWWA C901 "Polyethylene Pressure Pipe and Tubing"

B. Materials Schedule:

Service Pipe **Copper pipe and tubing ASTM B88 Type K soft copper tubing with Nitrile Gaskets, plastic coated (02510.1)**

90 degree elbow on Meter **Brass pack joint type 90 degree elbow**
Brazed copper sweat on copper pipe

PART 3 EXECUTION

3.01 INSTALLATION

A. Installation Specification Reference: **IAPMO Standard 804-1 for brazed fittings**
AWWA C901 Foreward Section II
City of Huntington Beach Standard Drawings 601 through 603

B. Join PE Pipe to compression fittings with internal sleeve. Do not heat PE pipe.

C. Apply No-Ox_Id "A" special WW on saddle and corp. per Specs. 02510.3.

1-Mar-19

SECTION 02510.9 PVC PIPE

PART 1 GENERAL

1.01 QUALITY ASSURANCE

Item	Test For	Test Standard	Frequency	First Test Paid By	Retests Paid By
Plastic Water Pipe	Field Pressure	**AWWA C605, Simultaneous Pressure and Leakage Test**	**1 test**	**contractor**	**contractor**

1.02 SUBMITTALS

Shop Drawings	Catalog Data	Installation Instructions	O&M Instructions	Certificate of Compliance	Engineering Calculations
yes	**yes**	**yes**	**no**	**yes**	**no**

PART 2 PRODUCTS

2.01 ACCEPTABLE MANUFACTURERS

A. PVC Distribution Pipe	**Certainteed Corp. Pipe and Plastics "Vinyl Iron", Valley Forge, PA**	**J.M. Manufactur'g Co., Inc., Livingston, NJ**	**Pacific Western Extruded Plastics Company, Eugene, OR**
B. AC-PVC Transition Coupling	**Certainteed All C-900**		

2.02 MATERIALS

A. Materials Specification Reference:
- AWWA C900 "Polyvinyl Chloride (PVC) Pressure Pipe 4 in through 12 in for Water"
- AWWA C905 "Polyvinyl Chloride (PVC) Pressure Pipe 14 in through 48 in for Water"
- AWWA C909 Molecularly Oriented Polyvinyl Chloride (PVCO) Pressure Pipe 4-24 inches

B. Materials Schedule:

Fluid Conveyed — **Water**

Material

Joints — **Rubber Gasket Push-on Joints**

Gasket Material — **SBR gaskets or NBR (Buna-N Nitrile) may be required in hydrocarbon contaminated soil**

Conform to ASTM D477

Fitting Material — **Ductile Iron per Section 02510.1**

Design

	C-900	C-905	C-909
Dimension Ratio	18	18	NA
Working Pressure (psi)	235	235	235
Allowable Deflection	None	None	None

Color — **White or Blue for potable water pipe**

Purple (Tourmaline) for reclaimed water pipe

Field location (Potable Water) — **Attach 14 gauge insulated with THHN - THWN, wire to top of pipe**

Use 6-inch wide plastic marker tape labeled "CAUTION POTABLE WATER LINE BELOW"

Locator Wire — **Locator wire shall be without splices, unless approved by Public Works Inspector**

PART 3 EXECUTION

3.01 INSTALLATION

A. Installation Specification Reference:
- **Manufacturer's installation instructions**
- City of Huntington Beach Dept of Public Works Water Division Plan No 606
- AWWA C605, UNI-PUB-08, and UNI-PUB-09

B. Test Pressure 150 psi

C. Allowable Leakage

	4 in	6 in	8 in	12 in	16 in.
gph/1000ft per AWWA C605	0.33	0.49	0.66	1.00	1.32

D. Use Ductile Iron Class 350 Fittings for deflections per Section 02510.1. For Horizontal deflections only CertainTeed High Deflection Couplings may be used with a maximun of 2-degrees per joint for a total of 4-degrees of deflection per coupling.

E. Do not hot tap (for horizontal deflection only) PVC pipe within 3 feet of collars, joints or fittings.

F. Do not install pipe until curb and gutter are in place or are staked by a licensed surveyor. If curb and gutter fall over pipe alignment, relocate pipe.

G. Chlorination shall be performed per Section 02516.

H. Minimum cover

Pipe size	4 in	6 in	8 in	12 in
Min cover	36 in	36 in	36 in	48 min.

1-Sep-13

SECTION 02516 DISINFECTION OF WATER DISTRIBUTION

PART 1 GENERAL

1.01 QUALITY ASSURANCE

Item	Test For	Test Standard	Frequency	First 2 Tests Paid By	Retests Paid By
Chlorine residual	chlorine residual	**Standard Methods Drop Dilution Method**	**test all pipe**	**City**	**contractor**
Bacteria	coliform	**Standard Methods, Coliform aerogenes negative, total plate count < 500 cfu/cc**	**16 hours after flushing, 2 sets of samples collected 16 hours apart. If any sample fails, 2 consecutive samples, 16 hours apart must pass**	**City**	**contractor**

1.02 SUBMITTALS

Shop Drawings	Catalog Data	Installation Instructions	O&M Instructions	Manufacturer Statement of Responsibility	Certificate of Compliance	Engineering Calculations
no	**no**	**Submit flushing chlorination plan**	**no**	**no**	**required from Utilities Division approved testing company.**	**no**

PART 2 PRODUCTS

2.01 ACCEPTABLE TESTING COMPANIES **California Department of Public Health Certified Laboratory**

2.02 MATERIALS

A. Materials Specification Reference: **AWWA B301 "Liquid Chlorine"**

B. Materials Schedule:

Location **All water mains**

Requirements before testing

Thrust block curing **7** days or 2000 psi

Curing of mortar joints (if any) **8** hours

Curing of mortar lining and coating **14** days

Testing water

Reuse of chlorination water **OK for pressure testing in mains not connected to City system**

Disinfectant **Chlorine Gas**

Method of Chlorination **Continuous Feed Method**

Method of Injection **Inject solution using booster pump**

Alternates **May be used if approved by Utilities Manager**

Maximum Fill Rate **1** fps

Dosage

Pipe diameter	**6 in**	8 in	12 in	16 in	20 in	24 in
Pipe volume per 1000 feet	1,469 gal	2,611 gal	5,876 gal	10,445 gal	16,321 gal	23,502 gal
Maximum Fill Rate (gallons per minute	88	157	352	627	979	1410

Air purging Use air valves and hydrants where available. Otherwise, tap line at high points. Expel air and cap with brass plug.

Chlorine Residual Required **50** ppm after injection

25 ppm after **24 hours**

The new distribution main shall be flushed at a minimum of 3 ft./second per AWWA C651.

Size of Pipe	Min. Flow GPM
6	260
8	470
12	1,060

PART 3 EXECUTION

3.01 APPLICATION

A. Application Specification Reference: **AWWA C651 "Disinfecting Water Mains"**
Standard Methods for the Examination of Water and Wastewater

B. Disinfection shall be per attached flow charts 02516.1 & 02516.2.

C. Provide necessary test and sampling fittings in pipeline as work progresses.

D. Perform chlorine residual sampling per AWWA C651.

E. If any sample fails, bacterial tests shall pass on two consecutive days prior to acceptance by City.

F. Neutralize chlorine before disposal per AWWA C651 Section 4.

G. Flush line until chlorine content equals system chlorine levels. Use fire hydrant meter or calculate volume of water and pay for all water used.

H. Bacteria sampling will be done by City personnel or City approved independent water laboratory 16 hours minimum after lines are flushed.

I. Do not place line into service until City's written acceptance of testing results is received.

J. Pressure testing and disinfection shall be by a contractor on the City's Utilities Division's current list.

1-Mar-19

SECTION 02513 HYDRANTS

PART 1 GENERAL

1.01 SUBMITTALS

Shop Drawings	Catalog Data	Installation Instructions	O&M Instructions	Manufacturer Statement of Responsibility	Certificate of Compliance	Engineering Calculations
no	yes	no	no	no	on request	no

PART 2 PRODUCTS

2.01 ACCEPTABLE MANUFACTURERS

A. Wet Barrel Fire Hydrants	Clow 860
B. Breakaway Spools and Bolts	Use same manufacturer as hydrant or manufacturer approved by hydrant manufacturer.
C. Bolts	Use same manufacturer as hydrant or Tri-Pack

2.02 MATERIALS

A. Materials Specification Reference:	AWWA C503 "Wet Barrel Fire Hydrants"
Lining	AWWA C550 "Protective Epoxy Interior Coatings of Valves and Hydrants"
Threads	NFPA 1963 "National (American) Fire Hose Coupling Screw Threads"

B. Materials Schedule:

Exposure	Outdoor
Fluid Conveyed	Water
Maximum Working Pressure	150 psi
Type	Wet Barrel Hydrant
Barrel Size	6 inch minimum
Bury Depth	42 inch maximum
Bury Length	varies
Bury Inlet Condition	Flanged
Number of Hose Nozzles	2 hose nozzles
Hose Nozzle Diameter	2.5 inch
Number of Pumper Nozzles	1 pumper nozzle
Pumper Nozzle Diameter	4 inch
Direction to Open	Left (Counter-Clockwise)
Materials	
Stem	ASTM B124 High Silicon Bronze Alloy #7
Nozzle Cap	Cast Iron with Rubber Washer
Outlet Nozzle Cap Chains	Nonkinking Steel Cap Chain
Hydrant Spool	One 6" x 6" Hydrant Breakaway Spools cement lined per AWWA C104
Hydrant Spool Coating	Asphalt Coating per SSPWC 206-3.6
Bolts	Steel break off bolts Hex Hot-Dipped Galvanized 5/8" x 3"
Lining	Epoxy (9-16 mils per AWWA C550)
Coating (includes breakaway spool)	Powder Epoxy per Section 09666.1
Color	
Public Hydrants	HydraPaint 9000 (yellow in color)
Private Hydrants	Rust-Oleum #1210 Fire Hydrant Red

PART 3 EXECUTION

3.01 INSTALLATION

A. Installation Specification Reference:	AWWA M17, "Installation, Field Testing and Maintenance of Fire Hydrants"
	City of Huntington Beach Water Department Standard Plan 607

B. Hydrant Elevation - bottom flange 4 inches above paving.

C. Bury elbow shall have thrust block.

PART 1 GENERAL

1.01 QUALITY ASSURANCE

A.

Item	Frequency	Bacteriological Testing: First Test Paid By	Bacteriological Testing: Retests Paid By
Connection to existing line	required at all tie ins	City	contractor

1.02 SUBMITTALS

A.

Shop Drawings	Catalog Data	Installation Instructions	O&M Instructions	Manufacturer Statement of Responsibility	Certificate of Compliance	Engineering Calculations
Highlining plan or alternate plan to maintain customer service.	no	no	no	no	no	no

B. City Engineer reserves the right to take over work and backcharge Contractor in the event that progress is inadequate to complete connection within specified time limit.

C. Do not disturb existing water lines without a Public Works Inspector present. Do not operate existing valves. Only the City authorized water operation representative may operate existing valves.

D. Adjust vertical alignment to avoid high points in pipelines. Install air vac valves if high points cannot be eliminated.

E. Do not connect new pipelines to existing facilities until new pipe passes pressure and bacteriological tests.

F. Refer to Specs. 02516 for Disinfection Requirements.

1.03 SUBMITTALS

A.

Shop Drawings	Catalog Data	Installation Instructions	O&M Instructions	Manufacturer Statement of Responsibility	Potholing data	Proof of Notification
Required on steel pipe. Required on connections to pipelines 16" or larger.	no	required on steel pipe only	no	no	Determine locations of connections in advance. Inspection required.	On receipt of request City will notify affected customers. Schedule shutdown at least 48 hours after notification.

B. **Shutdown request** shall be submitted by the Contractor 72 hours before depressurizing or tapping existing pipelines Show time to complete connections, Owner's inspection, testing and disinfection within specified shutdown period.

C. **Shutdown period** shall not exceed 4 hours. For longer shutdowns, provide highline hoses, and fittings as approved by the Utilities Manager to maintain service per section 01724.

D. **Shutdown** shall be scheduled during periods of low use.

PART 2 PRODUCTS

not used

PART 3 EXECUTION

3.01 INSTALLATION

A. There is no warranty of the condition of existing pipelines. Existing valves may not shut bottle tight.

B. Where connecting to existing valves, first depressurize or restrain the existing valve per City requirements. On completion, replace valve can and cover and adjust to grade.

C. Dispose of water from existing mains and leakage from existing valves in accordance with Regional Water Quality Control Board Requirements. Provide pumps and hoses as required to continually dewater work area. Provide proof of permit from Regional Water Quality Control Board.

D. Dewatering of existing mains shall occur only in the presence of a Public Works Inspector.

E. Encroachment permits are required before any work begins in public right of way.

SECTION 02516 DISINFECTION OF WATER DISTRIBUTION

PART 1 GENERAL

1.01 QUALITY ASSURANCE

Item	Test For	Test Standard	Frequency	First 2 Tests Paid By	Retests Paid By
Chlorine residual	chlorine residual	**Standard Methods Drop Dilution Method**	**test all pipe**	**City**	**contractor**
Bacteria	coliform	**Standard Methods, Coliform aerogenes negative, total plate count < 500 cfu/cc**	**16 hours after flushing, 2 sets of samples collected 16 hours apart. If any sample fails, 2 consecutive samples, 16 hours apart must pass**	**City**	**contractor**

1.02 SUBMITTALS

Shop Drawings	Catalog Data	Installation Instructions	O&M Instructions	Manufacturer Statement of Responsibility	Certificate of Compliance	Engineering Calculations
no	**no**	**Submit flushing chlorination plan**	**no**	**no**	**required from Utilities Division approved testing company.**	**no**

PART 2 PRODUCTS

2.01 ACCEPTABLE TESTING COMPANIES **California Department of Public Health Certified Laboratory**

2.02 MATERIALS

A. Materials Specification Reference: **AWWA B301 "Liquid Chlorine"**

B. Materials Schedule:

Location **All water mains**

Requirements before testing

Thrust block curing **7** days or 2000 psi

Curing of mortar joints (if any) **8** hours

Curing of mortar lining and coating **14** days

Testing water

Reuse of chlorination water **OK for pressure testing in mains not connected to City system**

Disinfectant **Chlorine Gas**

Method of Chlorination **Continuous Feed Method**

Method of Injection **Inject solution using booster pump**

Alternates **May be used if approved by Utilities Manager**

Maximum Fill Rate **1** fps

Dosage

Pipe diameter	**6 in**	8 in	12 in	16 in	20 in	24 in
Pipe volume per 1000 feet	1,469 gal	2,611 gal	5,876 gal	10,445 gal	16,321 gal	23,502 gal
Maximum Fill Rate (gallons per minute	88	157	352	627	979	1410

Air purging Use air valves and hydrants where available. Otherwise, tap line at high points. Expel air and cap with brass plug.

Chlorine Residual Required **50** ppm after injection

25 ppm after **24 hours**

The new distribution main shall be flushed at a minimum of 3 ft./second per AWWA C651.

Size of Pipe	Min. Flow GPM
6	260
8	470
12	1,060

PART 3 EXECUTION

3.01 APPLICATION

A. Application Specification Reference: **AWWA C651 "Disinfecting Water Mains"**
Standard Methods for the Examination of Water and Wastewater

B. Disinfection shall be per attached flow charts 02516.1 & 02516.2.

C. Provide necessary test and sampling fittings in pipeline as work progresses.

D. Perform chlorine residual sampling per AWWA C651.

E. If any sample fails, bacterial tests shall pass on two consecutive days prior to acceptance by City.

F. Neutralize chlorine before disposal per AWWA C651 Section 4.

G. Flush line until chlorine content equals system chlorine levels. Use fire hydrant meter or calculate volume of water and pay for all water used.

H. Bacteria sampling will be done by City personnel or City approved independent water laboratory 16 hours minimum after lines are flushed.

I. Do not place line into service until City's written acceptance of testing results is received.

J. Pressure testing and disinfection shall be by a contractor on the City's Utilities Division's current list.

1-Mar-19

GUIDELINES FOR CITY OF HUNTINGTON BEACH PUBLIC WORKS INSPECTORS

Prior to connecting to the City potable water system, the contractor shall have an approved chlorination plan.

SECTION 02516.1 PIPELINE DISINFECTION PROCEDURES (Pipeline CONNECTED to City potable water system)

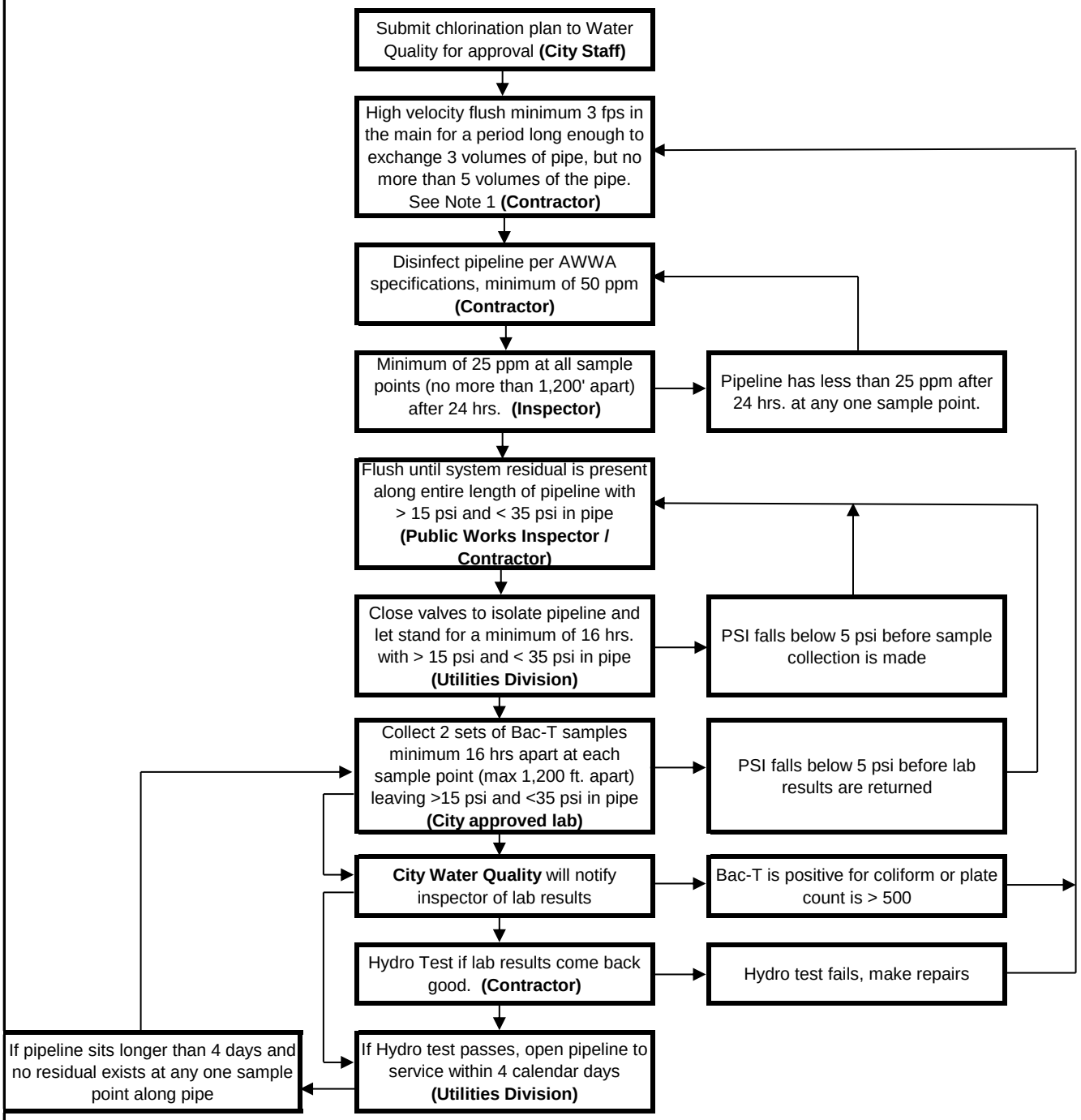

Note 1. If pipeline fails three consecutive cycles of chlorination, dechlorinations, and testing, or fails three consective cycles of flushing, the pipeline shall be mechanically cleaned at the contractor's expense prior to next cycle of chlorination, dechlorination and testing.

1-Mar-19

GUIDELINES FOR CITY OF HUNTINGTON BEACH PUBLIC WORKS INSPECTORS

SECTION 02516.2 PIPELINE DISINFECTION PROCEDURES (Pipeline ISOLATED from City potable water system)

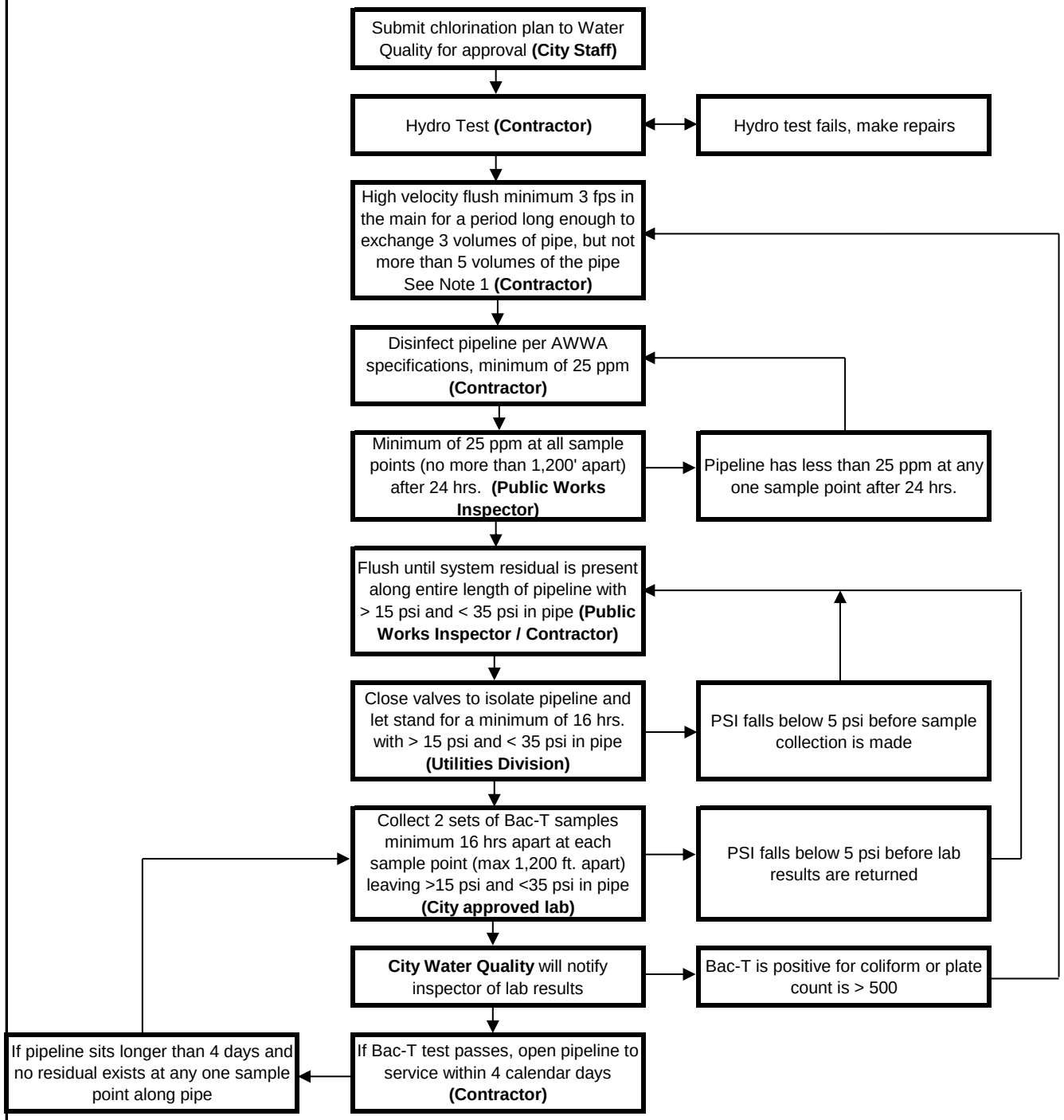

Note 1. If pipeline fails three consecutive cycles of chlorination, dechlorinations, and testing, or fails three consecutive cycles of flushing, the pipeline shall be mechanically cleaned at the contractor's expense prior to next cycle of chlorination, dechlorination and testing.

1-Mar-19

SECTION 02517 PRESSURE TESTING OF PIPELINES

PART 1 GENERAL

1.01 QUALITY ASSURANCE

Item	Test For	Test Standard	Frequency	First Test Paid By	Retests Paid By
Hydrostatic test	pressure	AWWA C600 for DIP, AWWA C605 for PVC, Green Book Sect 306-01 for Steel	test all pipe and services	**contractor**	**contractor**

PART 2 PRODUCTS

2.02 MATERIALS

A. Materials Schedule:

Requirements before testing

Thrust block curing **7** days or 1500 psi

Curing of mortar joints (if any) **8** hours

Curing of mortar lining and coating **14** days

Testing water

Testing and make up water **Meter and pay for test water.**

Filling rate **1** fps

Pipe diameter	**4 in**	6 in	8 in	12 in	16 in
Flow rate at filling velocity (gpm)	39.2	88.1	156.7	352.5	626.6
Allowable Leakage	See specifications for each pipe material				

Air purging Use air valves and hydrants where available. Otherwise, tap line at high points.
Install air and vacuum valve per City of Huntington Beach Std. Plan 611

Test pressure **150** psi

Test duration **3** hours

PART 3 EXECUTION

3.01 INSTALLATION

A. Installation Specification Reference: **Standard Specifications for Public Works Constr Section 306-01.4**

B. Test line before connecting to existing mains, except hot taps. For hot taps, install test plate on tapping valve or pass bacteriological testing prior to pressure testing.

C. Backfill trench with 2-1/2 feet of cover to anchor pipe before testing.

D. Dispose of water from existing mains and leakage from existing valves in accordance with Regional Water Quality Control Board Requirements. Provide pumps and hoses as required to continually dewater work area. Provide proof of permit from Regional Water Quality Control Board.

E. Use City approved independent testing company for final testing.

SECTION 02530.9 PVC SCH 80 PIPE

PART 1 GENERAL

1.01 QUALITY ASSURANCE

A.

Item	Test For	Test Standard	Frequency	First Test Paid By	Retests Paid By
Plastic Water Pipe	Field Pressure	Greenbook Std Spec 306-1.4.5	1 test	contractor	contractor

1.02 SUBMITTALS

Shop Drawings	Catalog Data	Installation Instructions	O&M Instructions	Manufacturer Statement of Responsibility	Certificate of Compliance	Engineering Calculations
no	yes	no	no	no	yes	no

PART 2 PRODUCTS

2.01 ACCEPTABLE MANUFACTURERS

A. PVC Water Pipe

Certainteed Corp. Pipe and Plastics "Vinyl Iron", Valley Forge, PA	J.M. Manufactur'g Co., Inc., Livingston, NJ	Pacific Western Extruded Plastics Company, Eugene, OR

MATERIALS

2.02 Materials Specification Reference: ASTM D1785 "Polyvinyl chloride (PVC) plastic pipe, Schedule 80"

A. PVC Water Pipe 4"-8" ASTM D2467 "Socket-type PVC plastic type fittings, Schedule 80"

B. Materials Schedule:

Location	Valve Box Riser and Blow-off Assembly
Exposure	Buried
Style	Valve Box Riser and Blow-off Assembly
Quantity	See Plans
Size	See Plans
Schedule	80
Fluid Conveyed	Water
Joints	Solvent Cement Joints
Color	White

Materials

Pipe

Fittings

PART 3 EXECUTION

3.01 INSTALLATION

Installation Specification Reference: Manufacturer's installation instructions

Dept of Public Works Water Division Standard Plan No 608 and 611

A. Test Pressure 150 psi

B. Allowable Leakage None

1-Sep-13

SECTION 03100 CONCRETE FORMS AND ACCESSORIES

PART 1 GENERAL

1.01 QUALITY ASSURANCE

	Item	Test For	Test Standard	Frequency	First Test Paid By	Retests Paid By
A.	Formwork	Pre-pour inspection	Plans	once each pour	City	owner
B.	Waterstop	Chemical Resistance	10 day immersion in 10% $H2SO_4$, HCl, or NaOH	as directed	City	contractor

1.02 SUBMITTALS

	Shop Drawings	Catalog Data	Installation Instructions	O&M Instructions	Manufacturer Statement of Responsibility	Certificate of Compliance	Engineering Calculations
A.	no	waterstops, joint sealant	joint sealant	no	no	joint sealant	no

PART 2 PRODUCTS

2.01 ACCEPTABLE MANUFACTURERS

	1	2	3
A. Waterstops	Greenstreak, Inc., Saint Louis, MO	Vulcan Products, Inc., Birmingham, AL	W.R. Meadows Inc. (Sealtight), Elgin, IL
B. Expansion and Contraction Joints	Pecora Corp., Harleysville, PA	Sonneborn Building Products Div., Chemrex, Inc. (Sonoflex), Minneapolis, MN	W.R. Meadows Inc. (Sealtight), Elgin, IL
C. Premolded Joint Filler	W.R. Grace Company, Cambridge, MA	W.R. Meadows, Inc., Elgin, IL	Wiley Cork Co., Wilmington, DE
D. Preformed Control Joint	Burke Concrete Accessories Inc. (Keyed Kold Retained Kap), San Mateo, CA	Vinylex Corporation (Kold-Seal Zip-Per Strip KSF-150-50-50, Knoxville, TN	

2.02 MATERIALS

A. Materials Specification Reference: Standard Specifications for Public Works Construction Sect. 201-3

B. Materials Schedule

Waterstops

Material	virgin polyvinyl chloride
Dimensions	
Construction joints	6" wide x 3/8" thick at center, 7/8" thick at edge
Expansion joints	9" wide x 1-3/8" thick at center, 1/4" thick at edge bulbed type
Pattern	ribbed or corrugated
Hydrostatic resistance	125 ft H_2O

Premolded Joint Filler

Type	Nonextruding and Resilient Filler (Non-bituminous) (ASTM D1752)

Joint Sealant

Type	Type "A" Sealant (2-Part Polyurethane Sealant - Ca Spec 8030-61J-01) Type "B" Sealant (Preformed Elastomeric Sealant - ASTM D268) Type "E" Joint Sealant (Polysulfide Polymer and Rubber Rod)

PART 3 EXECUTION

3.01 INSTALLATION

A. Installation Specification Reference: Standard Specifications for Public Works Const. Sect. 303-1.8.7

B. Chamfer sharp edges with 3/4" x 3/4" triangular fillets

C. Clean form surface and coat with high penetrating form oil before placing concrete.

D. Notify Inspector 24 hours before pre-pour inspection.

1-Sep-13

SECTION 03200 CONCRETE REINFORCEMENT

PART 1 GENERAL

1.01 QUALITY ASSURANCE

	Item	Test For	Test Standard	Frequency	First Test Paid By	Retests Paid By
A.	Steel Rebar	Tensile Strength	ASTM A 615	See Greenbook Std Spec Table 201-2.5.2	contractor	contractor
B.	Rebar Placement	Prepour inspection	Plans	once each pour	contractor	owner

1.02 SUBMITTALS

	Shop Drawings	Catalog Data	Installation Instructions	O&M Instructions	Manufacturer Statement of Responsibility	Certificate of Compliance	Engineering Calculations
A.	placing rebars per ACI 315	no	no	no	no	mill test reports	no

PART 2 PRODUCTS

A Bar Splicing Couplers: **Dayton Barsplice, Inc. (Dywidag), Dayton, OH**

2.01 MATERIALS

A. Materials Specification Reference: **ASTM A775 Epoxy Coated Steel (Electrostatic Spray)**
Standard Specifications for Public Works Construction Sect. 201-2

B. Materials Schedule

Reinforcing Steel
Steel Yield Strength (f_y) **60000** psi
Type **Stainless Steel with ACI Hook Ends or**
Epoxy-coated steel rebar (ASTM A775) with ACI hook ends

Welded Wire Fabric **Not permitted. Use reinforcing bars.**

Bar Supports
Slabs on grade **Use concrete supports**
Beams, walls and slabs not on grade **Use galvanized or plastic coated supports**

PART 3 EXECUTION

3.01 INSTALLATION

A. Installation Specification Reference: **Standard Specifications for Public Works Construction Sect. 303-1.7**
CRSI Recommended Practice for Placing Reinforcing Bars

B. Deliver steel to site bundled and tagged

C. Notify Inspector 24 hours before pre-pour inspection.

D. Reinforcement shall be free of visible rust. If rust is visible, sandblast and remove corrosion.

SECTION 03300 CAST IN PLACE CONCRETE

PART 1 GENERAL

1.01 QUALITY ASSURANCE

	Item	Test For	Test Standard	Frequency	First Test Paid By	Retests Paid By
A.	Fresh Concrete	Sampling Fresh Concrete	ASTM C172	at least 4 each 50cy	contractor	contractor
B.	Fresh Concrete	Molding & Curing Specimens	ASTM C31 (AASHTO T23)	1 each sample	contractor	contractor
C.	Fresh Concrete	Slump	ASTM C143 (AASHTO T119)	1 each batch	contractor	contractor
D.	Fresh Concrete	Air Content	ASTM C 173 or C231	as directed	contractor	contractor
E.	Cured Concrete	Obtaining Drilled Cores	ASTM C42 (AASHTO T24)	as directed	contractor	contractor
F.	Cured Concrete	Compressive Strength	ASTM C39 (AASHTO T22)	1 each sample	contractor	contractor
G.	Cured Concrete	Flexural Strength	ASTM C78 (AASHTO T97)	as directed	contractor	contractor
H.	Cured Concrete	Unit Weight	ASTM C138 AASHTO T121)	as directed	contractor	contractor
I.	Cured Concrete	Drying Shrinkage	Calif Test 530	as directed	contractor	contractor

1.02 SUBMITTALS

	Shop Drawings	Catalog Data	Installation Instructions	O&M Instructions	Manufacturer Statement of Responsibility	Certificate of Compliance	Engineering Calculations
A.	falsework	concrete mix design, admixtures	admixtures	no	no	aggregate, cement, admixtures	no

PART 2 PRODUCTS

2.01 MATERIALS

A. Materials Specification Reference: **Standard Specifications for Public Works Construction Sect 201-1**

B. Materials Schedule

Concrete

Class	A	C	E	
Cement Required	560	450	100	lbm/cy
ASTM C131 Grading	C	C	C	
28-day f'c	3250	2000	100	psi
Cement Type	Type II	Modified Low Alkali		
Water Cement Ratio	0.571	0.711	3.300	gal/sack

Aggregate

Coarse Aggregate **Normal weight**

Fine Aggregate (<#4 Sieve) **Normal weight**

Aggregate Grading **40%** Fine 60% Coarse by volume

47% Fine 53% Coarse by weight

Unit Weight **150** pcf

Air Content 4% +/- 1%

Admixtures

Air Entraining Agents per ASTM C260	Color Pigments	Inert Powders, (Bentonite, Lime, Silica)	Set Accelerators (Calcium Chloride)	Set Retarders per ASTM C494	Water Reducers per ASTM C494	Waterproofing compounds
Permitted	Not Permitted	Not Permitted	Not Permitted	Not Permitted	Permitted	Not Permitted

Flyash Content (maximum) **20%** **1.20** replacement ratio

Class **Standard Specification Class F**

PART 3 EXECUTION

3.01 INSTALLATION

A. Installation Specification Reference: **Standard Specifications for Public Works Const Sect. 303-1, 303-5**

B. Installation Schedule

Location	Buried Structures	Encasements	Manholes And Vaults	Thrust Blocks	Trench Slurry	Meter PAP
Concrete Class	A	C	A	C	E	A
Maximum Slump (in)	5	4	5	4	5	4
Finish Class	Ordinary surface finish	Ordinary surface finish	Class 1 "smooth" surface finish	none	none	Class 1 "smooth"
Weak Plane Joint Spacing	n/a	n/a	n/a	n/a	n/a	n/a
Vapor Barrier	required	n/a	not required	n/a	n/a	n/a

SECTION 03481 PRECAST CONCRETE VAULTS

PART 1 GENERAL

1.01 QUALITY ASSURANCE

	Item	Test For	Test Standard	Frequency	First Test Paid By	Retests Paid By
A.	Installed Vaults	Watertightness	no observed water after 1" simulated rain	1 each vault	Contractor	Contractor

1.02 SUBMITTALS

	Shop Drawings	Catalog Data	Installation Instructions	O&M Instructions	Manufacturer Statement of Responsibility	Certificate of Compliance	Engineering Calculations
A.	yes	yes	yes	no	no	yes	no

PART 2 PRODUCTS

2.01 MATERIALS

A. Materials Specification Reference: **ASTM C913 - Precast Concrete Water and Wastewater Structures**

B. **Acceptable Manufacturer's** **Jensen PreCast, Fontana, CA**

C. Materials Schedule

Precast concrete vaults

Location	**4' x 5' manhole vault**	**6' x 6' manhole vault**	**6' x 10' manhole vault**	**6' x 12' manhole vault**	**8' x 14' manhole vault**
Dimensions, Inside					
Width (Feet)	4	6	6	6	8
Length (Feet)	5	6	10	12	14
Minimum Depth (Feet)	4.5	4.5	4.5	4.5	4.5
Standard Plan	604A, 604B	604C	605A	605B, 605C	605D
Jepsen Precast Series Number	K4050	K3672	K610	K612	K614
Minimum Wall thickness	6 inches				
Knockouts and Sumps	sump and pipe knockouts required				
Concrete Strength	4000 psi minimum				
Reinforcing Steel Grade	Grade 60				
Box Class	Class 700 per ASTM C913				
Riser and joint seal	Bituminous Material				

Cover

Design Loading	Parkway Loading, if in traffic way use H-20 Traffic Loading, with 30% impact.	
Material	Aluminum or HD Galvanized Steel with "Slip-Not" Required if in Sidewalk.	
Lifting Load	Spring or torsion bar lift assistance is required.	
Acceptable Manufactures	U.S. F. Fabrication Inc. Hialeah Flordia, Model ADH	Bilco Company, New Haven Connecticut, Type JD-ALH20
Floor	Required	
Drain	12" drain to 1 cy pea gravel	
Ladder	Hot Dipped Galvanized, Required if Vault is 5-foot or Deeper	
Structural Engineering	Design shall be stamped by California Registered Professional Engineer	

PART 3 EXECUTION

3.01 INSTALLATION

A. Installation Specification Reference: **Manufacturer's installation instructions**

Location	Vaults
Concrete Class	AA
Maximum Slump	5
Finish Class	Class 1 "smooth" surface finish
Vapor Barrier	not required

C. Obtain encroachment permit before disturbing paving or right of way improvements.

D. Contact Water Division Inspector before any work is done.

2/8/2016

SECTION 09913 IDENTIFICATION SYSTEMS

PART 1 GENERAL

1.01 QUALITY ASSURANCE

A.

Item	Test For	Test Standard	Frequency	First Test Paid By	Retests Paid By
Paint	Color	No discernable color difference	as directed	contractor	contractor

1.02 SUBMITTALS

Manufacturers Data Sheets	Catalog Data	Application Instructions	O&M Instructions	Manufacturer Statement of Responsibility	Certificate of Compliance	Color Samples
no	yes	no	no	no	no	yes

1.03 COLOR SCHEDULE

Equipment Item	Color
Physical hazards in normal operating areas	HydraPaint 9000 (yellow in color)
Public Fire Hydrants, Fire Hydrant Valve Box Lids, Guard Posts.	
Private Fire Hydrants, Post Indicator Valves, Fire Dept. Connections, Valve Box Lids	Rust-Oleum #1210 Fire Hydrant Red

Exposed Piping or Conduit	Color
Water - Potable	Medium Blue
Electrical Conduits	Gray
Telephone Conduits	White

PART 2 PRODUCTS

not used

PART 3 EXECUTION

A. Tag meters for reclaimed water.

SECTION 9966.1 FUSION BONDED EPOXY LININGS AND COATINGS

PART 1 GENERAL

1.01 QUALITY ASSURANCE

	Item	Test For	Test Standard	Frequency	First Test Paid By	Retests Paid By
A.	Epoxy coating	Dry Film Thickness	AWWA C550 Section 4 and SSPC PA2	1 each item	contractor	contractor
B.	Epoxy coating	Holiday Testing	AWWA C550 Section 5	1 each item	contractor	contractor

C. Perform all

1.02 SUBMITTALS

Manufacturers Data Sheets	Catalog Data	Application Instructions	O&M Instructions	Manufacturer Statement of Responsibility	Certificate of Compliance	Color Samples
yes	yes	no	no	no	yes	required on exterior coatings only

PART 2 PRODUCTS

2.01 ACCEPTABLE MANUFACTURERS

A. Fusion bonded liquid epoxy coatings	Carboline Coatings Co., St Louis, MO (891)	Keysite 750	Kopcoat Company, Inc. (Kop-Coat Hi-Gard), Pittsburgh, PA
B. Fusion bonded powder epoxy coatings	Cook Paint Co., (Pipe Clad)	Scotchkote FBE 134, 3M Company, St Paul, MN	Morton Chemical Powder Coatings Group, Reading, PA

2.02 MATERIALS

A.

Materials Specification Reference:	
All materials in contact with potable water	NSF/ANSI Standard 61: Drinking Water System Components
Steel Pipeline Coatings	AWWA C213 "Fusion Bonded Epoxy Coating for Steel Pipelines"
Valve and Hydrant Coatings	AWWA C550 "Protective Epoxy Interior Coatings for Valves & Hydrants"

B. Epoxy Coating Schedule

Location	Valve interiors	Steel pipe interiors	Valve can lids, Air vac cans, Fire hydrant exteriors
Surface Preparation	SSPC SP5 "White Metal Blast Cleaning"	SSPC SP5 "White Metal Blast Cleaning"	SSPC SP5 "White Metal Blast Cleaning"
Coating	Fusion bonded 100% solids epoxy	Fusion bonded 100% solids epoxy	Fusion bonded 100% solids powder epoxy
Application Rate	6 mil MDFT	6 mil MDFT	9 mil MDFT

PART 3 EXECUTION

3.01 APPLICATION

A.

Application Specification Reference:	
Steel Pipeline Coatings	AWWA C213 "Fusion Bonded Epoxy Coating for Steel Pipelines"
Valve and Hydrant Coatings	AWWA C550 "Protective Epoxy Interior Coatings for Valves & Hydrants"

B. Coatings for submerged surfaces shall extend 12 inches above high water surface

C. Finished surface shall be smooth and glossy with no graininess or roughness. Lining or coating shall have no blisters cracks, bubbles, underfilm voids, mechanical damage or discontinuities.

D. Patch scratches and damaged areas incurred while installing coated items with 2-component 80% minimum solids liquid epoxy resin. Wire brush or sandblast damaged areas per SSPC SP-10. Lightly abrade or sandblast coating or lining on sides of damaged area before applying liquid epoxy coating. Apply liquid epoxy coating to dry film thickness of at least 12 mils.

E. Color should match fire hydrant on all hydrant assemblies.

SECTION 09970 COATINGS FOR STEEL

PART 1 GENERAL

1.01 QUALITY ASSURANCE

	Item	Test For	Test Standard	Frequency	First Test Paid By	Retests Paid By
A.	Coatings	Dry Film Thickness	SSPC PA2	as directed	contractor	contractor
	Coatings	Holidays	Manufacturer's instructions under supervision of Owner-approved testing laboratory	as directed	contractor	contractor
B.	Coatings	11-month warranty inspection	See section 01787	1 test	contractor	contractor

1.02 SUBMITTALS

Manufacturers Data Sheets	Catalog Data	Application Instructions	O&M Instructions	Manufacturer Statement of Responsibility	Certificate of Compliance	Color Samples
Required - Show % solids by volume	yes	yes	no	yes	yes	yes

PART 2 PRODUCTS

2.01 ACCEPTABLE MANUFACTURERS

A. Industrial coatings	Ameron Protective Coatings, Brea, CA	Dunn Edwards, Los Angeles, CA	Ellis Coatings Company, Huntington Beach, CA	Sherwin Williams Company, Cleveland, OH	Sinclair Paint Co.	TNEMEC Coatings, Kansas City, MO
B. Anchor profile measurement	Keane Tator profile comparator			Testex Press-O-Film System		
C. Holiday testing devices	KD "Bird-Dog", thickness under 20 mils		Tinker & Rasor, San Gabriel, CA Model M-1 thickness under 20 mils		Tinker & Rasor, San Gabriel, CA Model AP 6000-16000V holiday detector, thickness over 20 mils	
D. Thickness testing devices	"Inspector"		Nordson Corp (Mikrotest), Anaheim, CA		"Positest"	

2.02 MATERIALS

A. Materials Specification Reference: **Caltrans Standard Specification Section 91 or as shown**

B. Industrial Coating Schedule:

Location	Valves, Nonpotable Meter Box Lids, Meter Vault Covers for Services 3" and Larger and Piping - Exposed	Steel Handrails, Pipe Supports and Structural Steel	Steel Steps, Ladders and Walkways
Exposure	Metal Finish - Equipment Exposed to Atmosphere	Metal Trim and Structural Steel Finish	Steel Coating - Skid Resistant
Surface Preparation	SSPC SP1 "Solvent Cleaning" followed by SSPC SP 2 "Hand Tool Cleaning" or SSPC SP 3 "Power Tool Cleaning	SSPC SP6 "Commercial Blast Cleaning" or SSPC SP8 "Pickling"	SSPC SP10 "Near White Blast Cleaning"
Primer	Rust Inhibitive Primer	Rust Inhibitive Primer	Polyamide Anti-corrosive Epoxy Primer
Application Rate	2 mils	2 mils	2.5 mils
Second Coat	Alkyd Enamel	Alkyd Enamel	Epoxy Aggregated Nonskid Finish
Application Rate	4 mils	4 mils	16 mils
Third Coat	Alkyd Enamel	Alkyd Enamel	
Application Rate	4 mils	4 mils	
Color	See section 09913		

PART 3 EXECUTION

3.01 APPLICATION

A. Application Specification Reference:

Painting Steel	**Steel Structures Painting Council (SSPC) Standards**
Other	**Caltrans Standard Specification Section 59**

B. Do not paint any of the following steel surfaces:

Nameplates or metal letters	Stainless Steel	Grease Fittings	Buried or mortar coated pipe	Brass or copper, submerged	Machined surfaces

C. Shop primed finishes shall receive field touch up of organic zinc primer over scratched or abraded areas.

D. Coatings for submerged surfaces shall extend 12 inches above high water surface

E. Finished surface shall be free from runs, drips, ridges, waves, shiners, laps, brush marks and variations in color texture, thickness and finish. Hiding shall be so complete that adding another coat would not increase the hiding.

F. Damaged coatings, pinholes and holidays shall have edges feathered and repaired per manufacturer's instructions.

CITY OF HUNTINGTON BEACH
DEPARTMENT OF PUBLIC WORKS

SERIES 600
WATER STANDARD PLANS

INDEX

ITEM	
DESIGN CRITERIA	#600 (1 OF 8)
GENERAL NOTES	#600 (2 & 3 OF 8)
IMPROVEMENT PLAN REQUIREMENTS	#600 (4 - 8)
ABBREVIATIONS	#600 (5 & 6 OF 8)
LEGEND	#600 (7 OF 8)
WATER PLAN REQUIREMENTS	#600 (8 OF 8)
STATE LAW, WATER MAIN SEPARATION	APPENDIX TO #600
1" WATER SERVICE WITH ¾" METER WITH AUTOMATIC METER READ (AMI)	#601
1" WATER SERVICE WITH 1" METER WITH AUTOMATIC METER READ (AMI)	#602
2" WATER SERVICE WITH 1" METER WITH AUTOMATIC METER READ (AMI)	#602A
1 ½ " OR 2" POSTIVE DISPLACEMENT METER WITH 2" SERVICE WITH AUTOMATIC METER READ (AMI)	#603
1 ½ " OR 2" COPPER WATER SERVICE INSTALLATION	#603A
3" COMPOUND METER WITH A 4" WATER SERVICE	#604A
4" COMPOUND METER WITH A 4" WATER SERVICE	#604B
6" COMPOUND METER WITH A 6" WATER SERVICE	#604C
4" FIRE / DOMESTIC METER ASSEMBLY	#605A (1 & 2 OF 2)
6" FIRE / DOMESTIC METER ASSEMBLY	#605B (1 & 2 OF 2)
8" FIRE / DOMESTIC METER ASSEMBLY	#605C (1 & 2 OF 2)
10" FIRE / DOMESTIC METER ASSEMBLY	#605D (1 & 2 OF 2)
TRENCHING AND RESURFACING DETAIL FOR MINIMUM COVER OR GREATER OVER PIPE	#606A
TRENCHING AND RESURFACNG DETAIL FOR LESS THAN MINIMUM COVER OVER PIPE	#606B
FIRE HYDRANT ASSEMBLY	#607

4" BLOW-OFF ASSEMBLY	#608
WATER QUALITY SAMPLING STATION DETAIL	#608A
BACKFLOW STANDARD PLAN OVERVIEW	#609 PAGE 1
BACKFLOW PREVENTION NOTES	#609 PAGE 2
1" THROUGH 2" REDUCED PRESSURE PRINCIPLE DEVICE FOR COMMERCIAL, INDUSTRIAL, AND MULTI FAMILY RESIDENTIAL	#609A
RESIDENTIAL FIRE AND DOMESTIC DOUBLE CHECK VALVE BACKFLOW ASSEMBLY (DCV) FOR METER UPSIZE AND NEW SERVICE	#609B
RESIDENTIAL FIRE AND DOMESTIC REDUCED PRESSURE PRINCIPLE DEVICE BACKFLOW ASSEMBLY FOR WATERFRONT PROPERTIES ONLY FOR METER UPSIZE AND NEW SERVICE	#609C
3" THROUGH 10" REDUCED PRESSURE PRINCIPLE DEVICE	#609D
AIR GAP BACKFLOW ASSEMBLY	#609E
BRIDGE & CULVERT CROSSING	#610 (1 & 2 OF 2)
2" AIR & VACUUM RELEASE VALVE ASS'Y	#611
VALVE BOX ASSEMBLY	#612
VALVE STEM EXTENSION	#612A
6", 8", OR 12" CUT-IN VALVE	#612B
METHOD FOR CUTTING & PLUGGING EXISTING WATER MAINS	#613
WATER LINE CUT OUT (TEES & CROSSES) FOR 12 DIA. MAIN AND SMALLER	#613A
THRUST BLOCKS	#614
PIPE BARRICADE ASSEMBLY	#615
ADJUSTABLE PIPE SUPPORT DETAIL ASSEMBLY	#616
NOT USED	#617
2.5"-10" DOUBLE CHECK DETECTOR	#618
INSTALLING TAPPING SLEEVES & VALVE, AND HOT TAP ASSEMBLY	#619 (1 & 2 OF 2)
STANDARD TAP OF STEEL MAIN	#620

INVERTED SIPHON ASSEMBLY	#621(1 & 2 OF 2)
SIPHON ASSEMBLY	#621A
STEEL CASING PIPE	#622
TAPPING STEEL PIPE	#623
UTILITY BOX IN SLOPE	#624
UTILITY BOX DETAILS	#625
NOT USED	#626-#629
EXOTHERMIC WELD AND BURIED JOINT BONDING DETAIL	#630
CATHODIC TEST STATION BOX & RUBBER GASKET JOINT BONDING DETAIL	#631
GATE VALVE BONDING AND MAGNESIUN ANODE	#632
CABLE TRENCH & ZINC ANODE	#633
BURIED INSULATING FLANGE DEATIL AND TEST STATION	#634
SACRIFICIAL ANODE TEST STATION WIRING DIAGRAM	#635
CATHODIC PROTECTION FOR DUCTILE IRON FITTINGS	#636
CATHODIC PROTECTION FOR 6-12-INCH DUCTILE PIPE WITH ANODE TEST STATION	#637
BURIED INSULATING FLANGE TEST STATION & TWO WIRE TEST STATION ASSEMBLY	#638

City of Huntington Beach
MINIMUM DESIGN CRITERIA - WATER MAINS AND APPURTENANCES

REFERENCE STANDARDS to be followed include:

1 City of Huntington Beach Standard Drawings and Specifications
2 American Water Works Association Standards
3 California State Health Department Standards

DESIGN FLOWRATES (PER 2010 WATER MASTER PLAN)

Peaking Zone 1	Peaking Zone 2
$Q_{max\text{-}day} = 1.6xQ_{average}$	$Q_{max\text{-}day} = 2.0xQ_{average}$
$Q_{peak\text{-}hour} = 2.5xQ_{average}$	$Q_{peak\text{-}hour} = 3.5xQ_{average}$

Actual Domestic Meter size will be determined by the Building & Safety Department

Typical Fire Flows at 20 psi (Add to Maximum day flows)
Single Family Residential
1500 gpm
Multi-Family Residential
3500 gpm
Commercial/Industrial
4000 gpm
Actual fire flows will be determined by the Fire Department based on the ISO Formula $Q=18CA^{0.5}$

PIPELINE DESIGN CRITERIA

Diameter[1]	6	8	12
Capacity[2]	250 gpm	780 gpm	2000 gpm
Min. Cover[3]	36 in	36 in	48 in
Material	DR 18 PVC per AWWA C900		

Notes:
1. 6-inch runs on cul-de-sacs may not exceed 300 ft.
2. Maximum of 5 feet head loss per 1000 feet, or 10 feet per 1000 feet with fire flow included. Velocity not to exceed 8 fps and 12 fps w/fire flow.
3. Cover is measured from top of pipe to finished grade.
4. For pipelines greater than 12-inch in diameter material selection will be based upon site specific circumstances. Consult with the City Utilities Division Engineering Section.
5. Loop all water mains and provide two points of connections to the City's water system, unless approved by City Engineer or authorized City Representative.

Minimum Design Pressures 40 psi at peak hour 20 psi residual with required fire flow **Roughness** C=130

STANDARD PIPELINE LOCATION IN STREETS

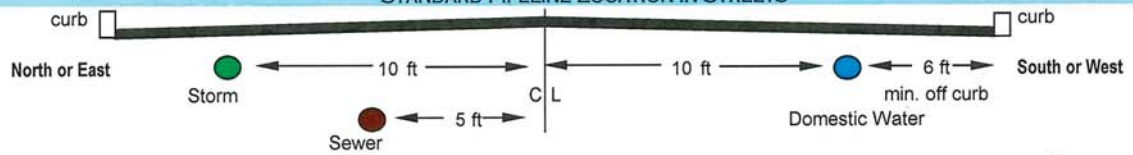

Notes:
1. Locate mains in vehicular travelways, outside of parking or landscaped areas.
2. Mains outside public right of way shall be centered within a minimum 10-foot wide dedicated easement, minimum 5 foot wide easements required for appurtenances, with a 20-foot access.
3. Thrust blocks bearing on soil on private property require an easement be secured for use of the soil.

TYPICAL SEPARATION CRITERIA FOR WATER, SEWER, AND STORM SEWER

Refer to the State of California, California Regulations Related to Drinking Water Title 22, Division 4-Environmental Health, Chapter 16-California Water Works Standards, Article 4-Materials and Installation of Water Mains and Appurtenances, 64572- Water Main Separation. Separation criteria are provided at the end of Standard Plan 600, however the most recently adopted version shall apply. All water laterals typically follow state division of drinking water criteria and shall require city approval only.

SEPARATION CRITERIA FOR SERVICE TAPS 2" & SMALLER

2 ft minimum clearance between taps on opposite sides

2 ft minimum between taps and services on same side

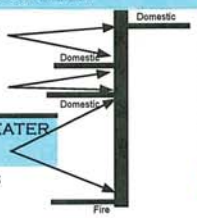

SEPARATION CRITERIA FOR SERVICE TAPS GREATER THAN 2"

3 ft minimum between domestic and fire serv. taps

3 ft. minimum between tap and end of pipe

3 ft. minimum to collars or appurtenances

VALVES

At tees, 3 valves are required.

At cross, 4 valves are required.

Place valves near the curb returns for the arterial streets.

Maximum segment of unvalved main shall not include more than
28 Dwelling units or
600 feet of main or
2 fire hydrants

BLOW OFFS, PUMP OUTS, AND AIR VACS

1. Blow offs are required at the end of dead end pipeline.
2. Pump Outs shall be installed at low points of mains 12-inch diameter and greater, and shall be installed on a case by case basis as directed by the City Engineer.
3. Air and vacuum valves shall be placed at high points on mains 12-inch diameter and greater.

TYPICAL FIRE HYDRANT SPACING

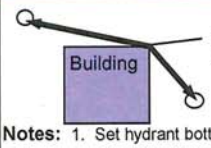

300 ft max separation in commercial or multi-family areas
500 ft max in single family residential areas

Notes:
1. Set hydrant bottom flange 2" min. to 4" max. above top of curb/finished grade per Std Detail 607.
2. Locate hydrants at curb returns at intersections.
3. 30" clearance is required around fire hydrants, see Std. Plan 607.

SERVICES AND METERS

1. Size meters per California Plumbing Code using approved sizes below.
2. Meter sizes shall be 3/4", 1", 1-1/2", 2", 4", 6" 8" or 10" only.
3. Meter each building or building section intended for separate ownership.
4. Multi-family (>2 attached units), Commercial, and Mixed Use Buildings served by master meter shall have separate domestic water and fire services.
5. Minimum service size shall be 1" domestic; 2" commercial; 4" fire.
6. Place meters in public right of way behind curbs and outside driveways.

The Public Works Department and the Fire Department must approve all plans before construction! Date: 11-Oct-16

GENERAL WATER NOTES

1. THE FOLLOWING DOCUMENTS ARE INCORPORATED INTO THESE CONTRACT DOCUMENTS BY REFERENCE.
   - A. CITY OF HUNTINGTON BEACH PUBLIC WORKS STANDARDS
   - B. STANDARD SPECIFICATIONS FOR PUBLIC WORKS CONSTRUCTION.
   - C. STANDARD PLANS FOR PUBLIC WORKS CONSTRUCTION.
   - D. AMERICAN WATER WORKS ASSOCIATION STANDARDS.
   - E. CALIFORNIA PLUMBING CODE
2. NOTIFY PUBLIC WORKS INSPECTION OFFICE 48 HOURS BEFORE START OF WORK AT (714) 536-5431.
3. ARRANGE PRECONSTRUCTION CONFERENCE WITH AFFECTED AGENCIES AND UTILITIES 48 HOURS BEFORE START OF WORK.
4. EXPOSE EXISTING WATER PIPES AND VERIFY HORIZONTAL AND VERTICAL LOCATION BEFORE CONSTRUCTION.
5. PROVIDE ACCESS TO MAIN LINE VALVES THROUGHOUT CONSTRUCTION.
6. DO NOT CUT OR MILL ASBESTOS CEMENT PIPE. WHERE JOINING EXISTING ASBESTOS CEMENT PIPE, REMOVE ENTIRE PIPE SEGMENT TO NEAREST JOINT OR SNAP ACP WITH SNAP CUTTER AND JOIN TO NEW PVC WITH A PROPERLY DIMENSIONED ADAPTER.
7. PROVIDE EXTENSIONS ON VALVE STEM TOPS HAVING OVER 36 INCHES COVER. SEE STANDARD PLAN NO 612A.
8. INSTALL AIR AND VACUUM VALVES PER STANDARD PLAN 611 AT HIGH POINTS (12" DIAMETER OR LARGER) OF VERTICAL DEFLECTIONS AND AT AIR TRAPS AS DEEMED NECESSARY BY A CERTIFIED WATER INSPECTOR.
9. THRUST BLOCKS AND RESTRAINED JOINTS ARE REQUIRED ON ALL FITTINGS OR VALVES. TIE BARS IN THRUST BLOCKS SHALL BE #4 EPOXY COATED REBAR OR 316 STAINLESS STEEL. PROVIDE ACI STANDARD HOOKED ENDS.
10. DO NOT TAP EXISTING MAINS WITHOUT A CERTIFIED WATER INSPECTOR PRESENT. PRESSURE TEST TAPPING SLEEVE IN CERTIFIED WATER INSPECTOR'S PRESENCE BEFORE TAPPING EXISTING MAIN.
11. DEFECTIVE WORK SHALL BE REMOVED AND CORRECTED WITHIN 24 HOURS FOLLOWING WRITTEN NOTIFICATION BY A CERTIFIED WATER INSPECTOR.
12. CITY OF HUNTINGTON BEACH WORK PRIOR TO ACCEPTANCE WILL BE LIMITED TO PLAN REVIEW AND CONSTRUCTION INSPECTION. ANY ADDITIONAL WORK BY THE CITY FORCES DEEMED NECESSARY BY CERTIFIED WATER INSPECTORS TO ENSURE COMPLIANCE WITH CITY STANDARDS WILL BE BACKCHARGED TO THE DEVELOPER OR CONTRACTOR. FINAL ACCEPTANCE WILL NOT OCCUR UNTIL REIMBURSEMENT IS RECEIVED.
13. FINAL ACCEPTANCE WILL NOT OCCUR UNTIL ORIGINAL RECORD DRAWINGS ON MYLAR AND AUTOCAD 2010 ARE DELIVERED TO AND ACCEPTED BY THE CERTIFIED WATER INSPECTOR. SHOW ALL FIELD CHANGES ON RECORD DRAWINGS.
14. FOR SHUTDOWNS LONGER THAN 6 HOURS, CONTRACTOR SHALL SUBMIT A HIGHLINING PLAN TO KEEP ALL CUSTOMERS IN SERVICE. ALL COSTS ASSOCIATED WITH MAINTAINING SERVICE TO AFFECTED CUSTOMERS SHALL BE BORNE BY THE CONTRACTOR.

GENERAL WATER NOTES

(CONTINUED)

15 ALL CONSTRUCTION OF WATER SYSTEM SHALL BE CLEARLY STAKED BY THE DEVELOPER'S OR CONTRACTOR'S SURVEYOR AT A MINIMUM OF 50 FOOT STATIONING WHERE THERE ARE NO EXISTING CURBS.

16 NO METER SHALL BE PLACED WITHIN A DRIVEWAY AREA. PLACE A MINIMUM OF 2 FEET FROM THE EDGE OF THE DRIVEWAY APRON. EXISTING WATER SERVICES FOUND WITHIN A DRIVEWAY SHALL BE REMOVED COMPLETELY AND REINSTALLED AT THE PROPER LOCATION, PER STANDARD PLAN 600, SHEET 1 OF 8, AT NO COST TO THE CITY.

17 PRIOR TO INCORPORATING A NEW MAINLINE INTO THE CITY'S WATER DISTRIBUTION SYSTEM, THE NEW MAIN SHALL BE TESTED PER SPECIFICATION 02516.

18 WATER SYSTEM IMPROVEMENTS SHALL BE INSTALLED ONLY IN LOCATIONS WHERE THE LOW MOLECULAR WEIGHT VOLATILE ORGANIC COMPOUND (VOC) DO NOT EXCEED TWENTY PARTS PER MILLION. PRIOR TO THE START OF CONSTRUCTION, THE CONTRACTOR SHALL SUPPLY THE PUBLIC WORKS INSPECTOR WITH A CONFIRMATION LETTER FROM THE CITY FIRE DEPARTMENT VERIFYING THE VOC CONCENTRATIONS ARE IN CONFORMANCE WITH CITY REQUIREMENTS.

19 ANY PUBLIC WATER SYSTEM IMPROVEMENTS LOCATED IN AN AREA CONTAINING REMEDIATED SOILS (I.e.>20ppm VOC's) SHALL USE SOFT COPPER TYPE "K" TUBING FOR ALL WATER SERVICES.

20 FIELD TESTING OF SOILS WHERE FACILITIES ARE TO BE INSTALLED MAY BE REQUIRED BY THE CITY'S CERTIFIED WATER INSPECTOR. TESTING SHALL BE PERFORMED BY A SPECIALTY LABORATORY APPROVED BY THE PUBLIC WORKS DEPARTMENT, IN LOCATIONS DETERMINED BY THE INSPECTOR, AT NO COST TO THE CITY.

21 DEVELOPER / CONTRACTOR IS RESPONSIBLE TO COORDINATE WITH THE CITY OF HUNTINGTON BEACH DEPARTMENT OF BUILDING AND SAFETY FOR THE SIZE OF WATER METER(S) AND/OR SERVICE LATERAL(S) REQUIRED. METER AND SERVICE LATERAL(S) SIZES SHOWN ON THIS PLAN WILL REQUIRE CITY BUILDING AND/OR FIRE DEPARTMENT APPROVAL. DEVELOPER IS RESPONSIBLE FOR COST OF REPLACING UNDERSIZED LATERALS DUE TO INCORRECT FIXTURE UNIT COUNTS, GALLONS PER MINUTE CALCULATIONS, OR LACK OF COORDINATION WITH THE CITY OF HUNTINGTON BEACH DEPT. OF BLDG. & SAFETY.

22 THE CONTRACTOR SHALL CONSTRUCT TEMPORARY BLOW OFF VALVES ON BOTH ENDS OF NEW MAINS AS REQUIRED FOR TESTING PURPOSES. CONSULT WITH CERTIFIED WATER INSPECTOR TO WAIVE THIS REQUIREMENT ON A CASE BY CASE BASIS. REFER TO SECTION 02516 OF CITY SPECIFICATIONS.

23 DISINFECTION AND FLUSHING PLANS SHALL BE SUBMITTED TO THE CERTIFIED WATER INSPECTOR. DISINFECTION AND FLUSHING PLANS SHALL BE SUBMITTED 5 WORKING DAYS PRIOR TO COMMENCEMENT.

24 ALL NUTS AND BOLTS OF BURIED PIPE FITTINGS SHALL BE COATED WITH NO-OX-ID "A" SPECIAL WW GREASE AND PROTECTIVE WRAP.

25 TRENCH PLATES SHALL BE FLUSH WITH PAVEMENT WHEN USED ON CITY COLLECTOR OR ARTERIAL STREETS OR AS DIRECTED BY INSPECTOR.

City of Huntington Beach

IMPROVEMENT PLAN REQUIREMENTS

1 PREPARE ALL DRAWINGS ON CITY OF HUNTINGTON BEACH 24" X 36" TITLEBLOCK MYLARS.

2 DRAWINGS SHALL BE TO A MINIMUM SCALE OF 1 INCH = 20 FEET.

3 DRAWINGS FOR 12-INCH WATER MAINS OR LARGER SHALL INCLUDE PLAN AND PROFILE, OR AS DETERMINED BY PUBLIC WORKS ENGINEERING SECTION.

4 DRAWINGS FOR 8 INCH AND SMALLER WATER MAINS SHALL SHOW VERTICAL CLEARANCE USING TOP AND BOTTOM OF PIPE ELEVATIONS AT THE POINT OF CROSSING. PROFILE SHALL BE PROVIDED AS DETERMINED BY PUBLIC WORKS ENGINEERING SECTION.

5 DRAWINGS SHALL INCLUDE THE FOLLOWING:

a. NORTH ARROW AND SCALE.
b. GENERAL WATER NOTES.
c. VICINITY MAP AND SCALE.
d. PROJECT ADDRESS AND DESCRIPTION.
e. NAME AND PHONE NUMBER OF DESIGN ENGINEERING FIRM.
f. SEAL OF CALIFORNIA LICENSED ENGINEER OF RECORD ON EACH SHEET WITH SIGNATURE AND EXPIRATION DATE.
g. CENTERLINES, PROPERTY LINES, RIGHT-OF-WAY LINES OF BOTH EXISTING & PROPOSED WORK.
h. EASEMENT CALLOUTS.
i. STREET CENTERLINE STATIONING.
j. BUILDING/UNIT NUMBER AND ADDRESS NUMBER FOR EACH BUILDING/UNIT SHOWN.
k. ALL KNOWN UTILITIES, EXISTING AND PROPOSED, INCLUDING WATER, RECLAIMED WATER, SEWER, STORM DRAIN, GAS, EDISON, TELEPHONE, CABLE TV AND PRIVATE OIL.
l. CALL OUT AND STATION ALL CONNECTIONS, SERVICES, FITTINGS, VALVES, HYDRANTS AND APPURTENANCES.
m. LOCATIONS OF EXISTING HYDRANTS AND SHUT-OFF VALVES NEEDED FOR CONSTRUCTION.

6 PLANS SHALL SHOW QUANTITY TAKEOFFS FOR PIPE, HYDRANTS, VALVES, FITTINGS, METERS, METER BOXES AND OTHER APPURTENANCES.

7 SUBMIT THRUST BLOCK CALCULATIONS FOR MAINS OVER 12 INCHES, OVER 200 PSI, OR FOR SOIL BEARING PRESSURES BELOW 1500 POUNDS PER SQUARE FOOT (PSF).

8 LOCATIONS AND DESCRIPTIONS OF ALL CONNECTIONS TO WATER MAINS, METERS AND BACKFLOW DEVICES SHALL BE REFLECTED ON ALL CIVIL DRAWINGS. SUBMIT IRRIGATION PLANS TO PUBLIC WORKS DEPARTMENT FOR APPROVAL.

9 CALL OUT FITTINGS BY TYPE AND STATION ON PLANS. ALL DEFLECTIONS OF PVC PIPE SHALL BE AT A DUCTILE IRON FITTING, AND LIMITED PER SPECIFICATION 02510.1. BENDING PVC PIPE ALONG THE LENGTH OF THE BARREL SHALL NOT BE PERMITTED.

10 SUBMIT RECORD DRAWINGS ON AUTOCAD 2010 AND ON MYLAR TO PUBLIC WORKS DEPARTMENT PRIOR TO FINAL ACCEPTANCE.

11 AT THE CITY'S REQUEST, THE DEVELOPER SHALL SUBMIT A HYDRAULIC COMPUTER WATER MODEL ANALYSIS FOR THEIR PROPOSED PROJECT. THE DEVELOPER MUST COORDINATE THE ANALYSIS WITH THE PUBLIC WORKS ENGINEERING SECTION AND SHALL BE RESPONSIBLE TO PAY THE CITY FOR ALL RELATED FEES REQUIRED TO PERFORM THE ANALYSIS. IF THE ANALYSIS SHOWS THAT PROJECT DEMANDS CANNOT BE MET WITH THE CITY'S CURRENT WATER SYSTEM, THE DEVELOPER SHALL BE REQUIRED TO UPGRADE THE CITY'S SYSTEM TO MEET THE DEMANDS AND/OR OTHERWISE MITIGATE THE IMPACTS OF THE PROJECT AT NO COST TO THE CITY.

12 ONE SACK SLURRY BACKFILL SHALL BE USED FOR ALL TRENCH CROSSINGS OF STREETS AND ALL TRENCHES WITHIN ALLEYS.

AC: ASPHALT-CONCRETE
AC OR ACP: ASBESTOS-CEMENT PIPE
ADPTR: ADAPTER
AR: AS REQUIRED
ARV: AIR AND VACUUM RELEASE VALVE
BBB: BELL-BELL-BELL
BBF: BELL-BELL-FLANGE
BD: BAND
BF: BELL-FLANGE
BLK: BLACK
BO: BLOW-OFF
BRZ: BRONZE
BS: BELL-SPIGOT
C: CONDUIT
COP: COPPER
CB: CATCH BASIN
CF: CURB FACE
CFS: CUBIC FEET PER SECOND
CI OR CIP: CAST IRON PIPE
CIR: CIRCLE
℄: CENTERLINE
CL: CENTERLINE
CL: CLASS
CLMP: CLAMP
CMC: CEMENT-MORTAR COATED
CML: CEMENT-MORTAR LINED
COMP: COMPRESSION
CONC: CONCRETE
CONCC: CONCENTRIC
COP-COP: COPPER-COPPER
CORP: CORPORATION
CPLG: COUPLING
CS: CORPORATION STOP (THREAD)
CTC: COAL-TAR COATING
CTL: COAL-TAR LINING
DB: DOUBLE STRAP, BRONZE
DB: DOUBLE
DC: DIRECT CURRENT
DCDA: DOUBLE CHECK DETECTOR ASSEMBLY
DE: DEAD END
DI OR DIP: DUCTILE IRON PIPE
DIA: DIAMETER
DIAPHR: DIAPHRAGM
DS: DOUBLE STRAP, STEEL
ECC: ECCENTRIC
EL: ELEVATION
ELEC: ELECTRIC OR ELECTRICAL
F OR FEM: FEMALE
FLG: FLANGE
FB: FLANGE-BELL
FC: FULL CIRCLE
FFF: FLANGE - FLANGE - FLANGE
FG: FINISH GRADE
FH: FIRE HYDRANT
FLEX: FLEXIBLE
FM: FIRE SERVICE METER
FS: FLANGE-SPIGOT
FT: FEET
FV: FLOAT VALVE
G: GAS
GA: GAGE
GALV: GALVANIZED
GND: GROUND
GNDNG: GROUNDING
GSNK: GOOSENECK
HD: HEAD
HGL: HYDRAULIC GRADE LINE
HI: HIGH
HI PRESS: HIGH PRESSURE
HNG: HINGE
HVY: HEAVY
HZ: HERTZ (CYCLES PER SECOND)
ID: INSIDE DIAMETER
IN: INCHES
IND: INDICATOR
IP: IRON PIPE OR IRON PIPE THREAD
JB: JUNCTION BOX
KW: KILOWATT
LEB: LARGE END BELL
LG: LONG
M: MALE
MAX: MAXIMUM
ME: MACHINE END
MEE: MACHINE EACH END
MH: MANHOLE
MIP: MALE IRON PIPE
MJ: MECHANICAL JOINT
MOA: MACHINED OVER ALL
MP: MULTI-PURPOSE
MTR: METER
NC: NORMALLY CLOSED
NO: NORMALLY OPEN
NRS: NON-RISING STEM
NSHT: NATIONAL STANDARD HOSE THREAD
OC OR O.C.: ON CENTER
OCT: OCTAGONAL
OD: OUTSIDE DIAMETER
OS&Y: OUTSIDE SCREW AND YOKE
P OR PMP: PUMP
PE: POLYETHYLENE, PLAIN END

APPROVED:

CITY ENGINEER

DATE: 9/1/13

CITY OF HUNTINGTON BEACH

DEPARTMENT OF PUBLIC WORKS

ABBREVIATIONS

STANDARD PLAN
600
5 OF 8

PL: PLATE
℄: PROPERTY LINE
PNEUM: PNEUMATIC
PORT: PORTABLE
PP: POWER POLE
PR: PRESSURE RATING OR PAIR
PRESS: PRESSURE
PRESS RED: PRESSURE REDUCING
PRV: PRESSURE REDUCING VALVE
PSF: POUNDS PER RELIEF VALVE
PSI: POUNDS PER SQUARE INCH
PVC: POLYVINYL CHLORIDE
PWR: POWERED
RED: REDUCING
REINF: REINFORCE OR REINFORCING
REP: REPAIR
REQD: REQUIRED
RGD: RIGID
RIS: RISING
RO: ROUGH
RPPD: REDUCED PRESSURE PRINCIPLE DEVICE
RS: RISING STEM
RT: RING-TITE
R/W: RIGHT-OF-WAY
S: SPIGOT, SEWER
SB: SINGLE STRAP, BRONZE
SCH: SCHEDULE NUMBER
SCR: SCREWED
SD: STORM DRAIN
SEB: SMALL END BALL
SERV: SERVICE
SIMP: SIMPLEX
SLD: SOLDER
SOL: SOLENOID
SP: SINGLE POLE
SPDT: SINGLE POLE DOUBLE THROW
SPECS: SPECIFICATIONS
SQ: SQUARE
SS: SPIGOT-SPIGOT OR SINGLE STRAP, STAINLESS STEEL, STEEL OR SANITARY SEWER
STD: STANDARD
STL: STEEL
STR: STRAIGHT
STRD: STRANDED
TAP: TAPPING
TB: THRUST BLOCK
TBD: TO BE DETERMINED
TC: THICKNESS CLASS
THD: THREAD
TRANS: TRANSITION
TRANSF: TRANSFORMER
TW: THERMOPLASTIC INSULATED (WIRE)
TYP: TYPICAL
UE: UTILITY EASEMENT
UG: UNDERGROUND
V: VOLT
VAC: VACUUM
VIC: VICTAULIC
VPR: VAPOR
VT: VAPOR TIGHT
W: WATER
W/: WITH
W&D: WRAPPED AND DIPPED
WELD: WELDING
W/O: WITHOUT
WP: WEATHER PROOF
WT: WEATHER TIGHT

APPROVED:

CITY ENGINEER

DATE: 9/1/13

CITY OF HUNTINGTON BEACH

DEPARTMENT OF PUBLIC WORKS

ABBREVIATIONS

STANDARD PLAN
600

NEW WATER MAIN

EXISTING WATER MAIN — W — W

EXIST. RECLAIMED WATER MAIN — RW — RW

EXISTING DRAIN LINE — D — D

EXISTING GAS LINE — G — G

EXISTING SEWER — S — S

EXISTING STORM DRAIN — SD — SD

EXIST. ELECTRICAL CONDUIT — E — E

EXIST. TELEPHONE CONDUIT — T — T

FLOW DIRECTION (PIPELINE)

BELL FITTING

FLANGED FITTING

SCREWED FITTING

GATE VALVES
(NON) RISING STEM (FLG'D)

BUTTERFLY VALVE (FLG'S) — B.V.

PLUG VALVE (FLG'S)

CHECK VALVES (FLG'D)

PRESS. REDUCING VALVE (FLG'D) — P.R.V.

PRESS. RELIEF VALVE (FLG'D) — P.R.V.S

FLOAT CONTROL VALVE (FLG'D) — F.V.

ALTITUDE VALVE (FLG'D) — A.V.

PUMP CONTROL VALVE (FLG'D)

STD. FIRE HYDRANT 6" x 4" x 2 ½"

FIRE HYDRANT 4" x 2 ½"

HI. PRESSURE FIRE HYDRANT

AIR RELEASE & VACUUM VALVE

FLEXIBLE COUPLING

VICTAULIC COUPLING

PROPERTY LINE — PL

RIGHT-OF-WAY — R/W

EASEMENT

WATER METER

FIRE SERVICE — 8"

SERVICE CONNECTION

PRESSURE GAGE

BACKFLOW DEVICE

TEE

CROSS

WYE

ELBOW

REDUCER

MASONRY BLOCK WALL

CHAIN LINK FENCE — X — X

STEEL PIPE BARRICADES

POWER POLES

TELEPHONE POLES

GUY WIRE & DEADMAN

SPRINKLER SYSTEM

LANDSCAPING

FLOW DIRECTION (DITCH)

THRUST BLOCKS

APPROVED:

CITY ENGINEER

DATE: 9/1/13

CITY OF HUNTINGTON BEACH

DEPARTMENT OF PUBLIC WORKS

LEGEND

STANDARD PLAN
600
7 OF 8

CONSTRUCTION NOTES:

		QTY.
1	CONST. (SIZE) HOT TAP, PER STD. PLAN NO. 612, 614, AND 619.	X EA.
2	CONST (SIZE) WATER MAIN, CLASS DR MATERIAL, PER STANDARD PLAN 606.	X LF.
3	CONST. (SIZE) D.I. "TEE", PER STD PLAN 614.	X EA.
4	CONST. (SIZE) GATE VALVE, PER STD. PLAN 612, AND 614.	X EA.
5	CONST. (SIZE) 90° D.I. ELL., PER STD. PLAN No, 614.	X EA.
6	CONST. F.H., PER STD PLAN NO. 607	X EA.
7	CONST. BLOW-OFF, PER STD. PLAN NO. 608	X EA.
8	CONST. PLUG, PER STD. PLAN NO. 613	X EA.
9	REMOVE (PLUG BLOW-OFF) AND CONNECT	X EA.
10	CONST (SIZE) DCDA OR RPPD PER STD. PLAN 618, 609, 609A	X EA.
11	CONST. (SIZE) WATER SERVICE AND (SIZE) METER PER STD. PLANS 601 - 604.	X EA.
12	CONST. THRUST BLOCKS, PER STD. PLAN NO. 614.	X EA.
		X EA.

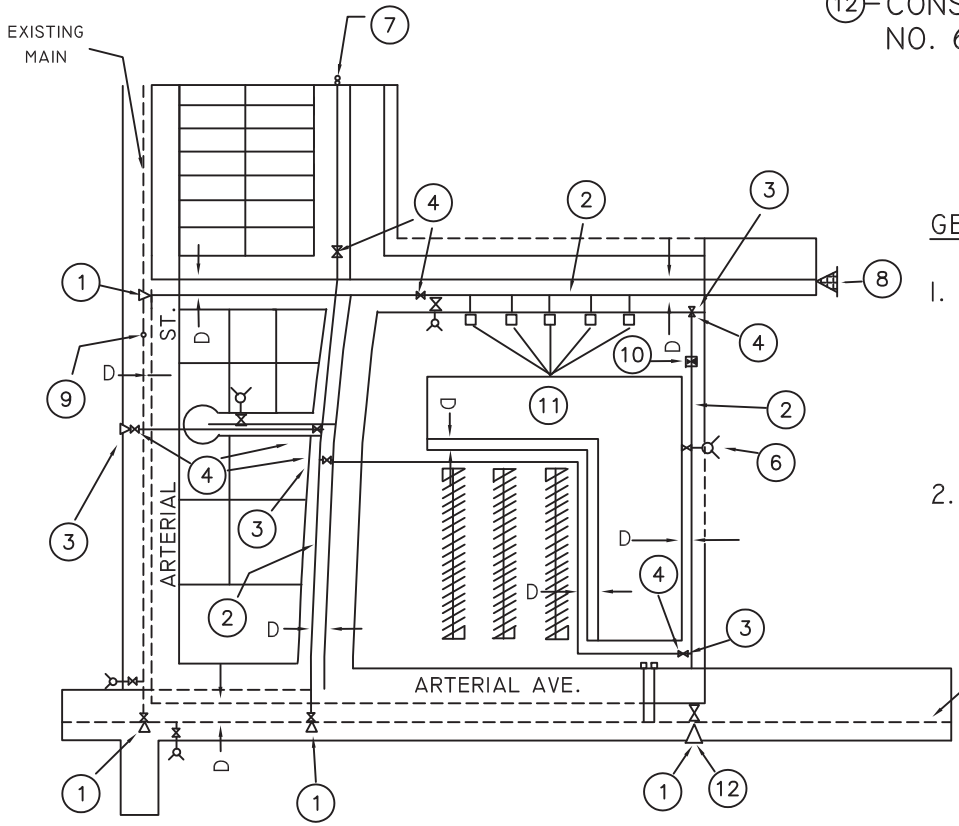

GENERAL NOTES

1. THIS NOTE HEREIN INCORPORATES BY REFERENCE ALL NOTES INCLUDED IN THE CITY OF HUNTINGTON BEACH STANDARD PLANS 100A, 100B AND 100C. PROVIDE HORIZONTAL CONTROL FOR ALL WATER IMPROVEMENTS.
2. SHOW ALL EXISTING UNDERGROUND UTILITIES ON PLANS (I.E., SERVICES, HYDRANTS, BACKFLOWS, ETC.)

EX. 12" A.C. WATER MAIN

NOTE: SHOW ALL UNDERGROUND UTILITIES

– N –

				UTILITY PLAN (ADDRESS) WATER CONST.	

24"x36" CITY STANDARD SHEETS

APPROVED: Tom Ott
CITY ENGINEER
DATE: 9/1/13

CITY OF HUNTINGTON BEACH
DEPARTMENT OF PUBLIC WORKS

WATER PLAN REQUIREMENTS

STANDARD PLAN 600
8 OF 8

CITY OF HUNTINGTON BEACH
DEPARTMENT OF PUBLIC WORKS

PLAN 600 APPENDIX
MINIMUM DESIGN CRITERIA
SEPARATION CRITERIA FOR WATER, SEWER, STORM SEWER

STATE OF CALIFORNIA
REGULATIONS RELATED TO DRINKING WATER
TITLE 22, CHAPTER 16 ARTICLE 4, SECTION 64572

3-PAGES TOTAL

(b) Water mains shall:

(1) Be installed below the frost line or be otherwise protected to prevent freezing; and

(2) Be protected against crushing under loads that could pass above the installation.

§64572. Water Main Separation.

(a) New water mains and new supply lines shall not be installed in the same trench as, and shall be at least 10 feet horizontally from and one foot vertically above, any parallel pipeline conveying:

(1) Untreated sewage,
(2) Primary or secondary treated sewage,
(3) Disinfected secondary-2.2 recycled water (defined in section 60301.220),
(4) Disinfected secondary-23 recycled water (defined in section 60301.225), and
(5) Hazardous fluids such as fuels, industrial wastes, and wastewater sludge.

(b) New water mains and new supply lines shall be installed at least 4 feet horizontally from, and one foot vertically above, any parallel pipeline conveying:

(1) Disinfected tertiary recycled water (defined in section 60301.230), and
(2) Storm drainage.

(c) New supply lines conveying raw water to be treated for drinking purposes shall be installed at least 4 feet horizontally from, and one foot vertically below, any water main.

(d) If crossing a pipeline conveying a fluid listed in subsection (a) or (b), a new water main shall be constructed no less than 45-degrees to and at least one foot above that pipeline. No connection joints shall be made in the water main within eight horizontal feet of the fluid pipeline.

(e) The vertical separation specified in subsections (a), (b), and (c) is required only when the horizontal distance between a water main and pipeline is less than ten feet.

(f) New water mains shall not be installed within 100 horizontal feet of the nearest edge of any sanitary landfill, wastewater disposal pond, or hazardous waste disposal site, or within 25 horizontal feet of the nearest edge of any cesspool, septic tank, sewage leach field, seepage pit, underground hazardous material storage tank, or groundwater recharge project site.

(g) The minimum separation distances set forth in this section shall be measured from the nearest outside edge of each pipe barrel.

(h) With Department approval, newly installed water mains may be exempt from the separation distances in this section, except subsection (f), if the newly installed main is:

(1) less than 1320 linear feet,

(2) replacing an existing main, installed in the same location, and has a diameter no greater than six inches more than the diameter of the main it is replacing, and

(3) installed in a manner that minimizes the potential for contamination, including, but not limited to:

(A) sleeving the newly installed main, or

(B) utilizing upgraded piping material.

§64573. Minimum Water Main Size for Community Water Systems.
Newly installed water mains in a community water system shall have a nominal diameter of at least four inches.

§64575. Flushing.

(a) A flushing valve or blowoff shall be provided at the end of each newly installed dead-end water main. Fire hydrants meeting the criteria of this section may be considered flushing valves.

(b) Flushing valves and blowoffs shall not discharge to a sanitary sewer without an air gap separation between the sewer and the valve or blowoff.

(c) The flushing velocity in the main shall not be less than 2.5 ft/s unless it is determined that conditions do not permit the required flow to be discharged to waste.

(d) Newly installed flushing valves and blowoffs shall be designed to maintain the minimum continuous flushing flows as indicated below to produce a minimum velocity of 2.5ft/s in commonly used sizes of pipe.

Table 64575-A. Minimum Flushing Flows for Different Size Water Mains.

Nominal Main Size Diameter (inches)	*Minimum Flushing Flow (gallons per minute)*
2	25
3	50
4	100
6	225
8	400
10	600
12	900
14	1200
16	1600

§64576. Air-Release, Air Vacuum, and Combination Valves.
Each new air-release, air vacuum, or combination valve, and any such valve installed to replace an existing valve shall be:

(a) Installed such that its vent opening is above grade, above the calculated 100-year flood water level, and, if recorded data are available, above the highest recorded water level;

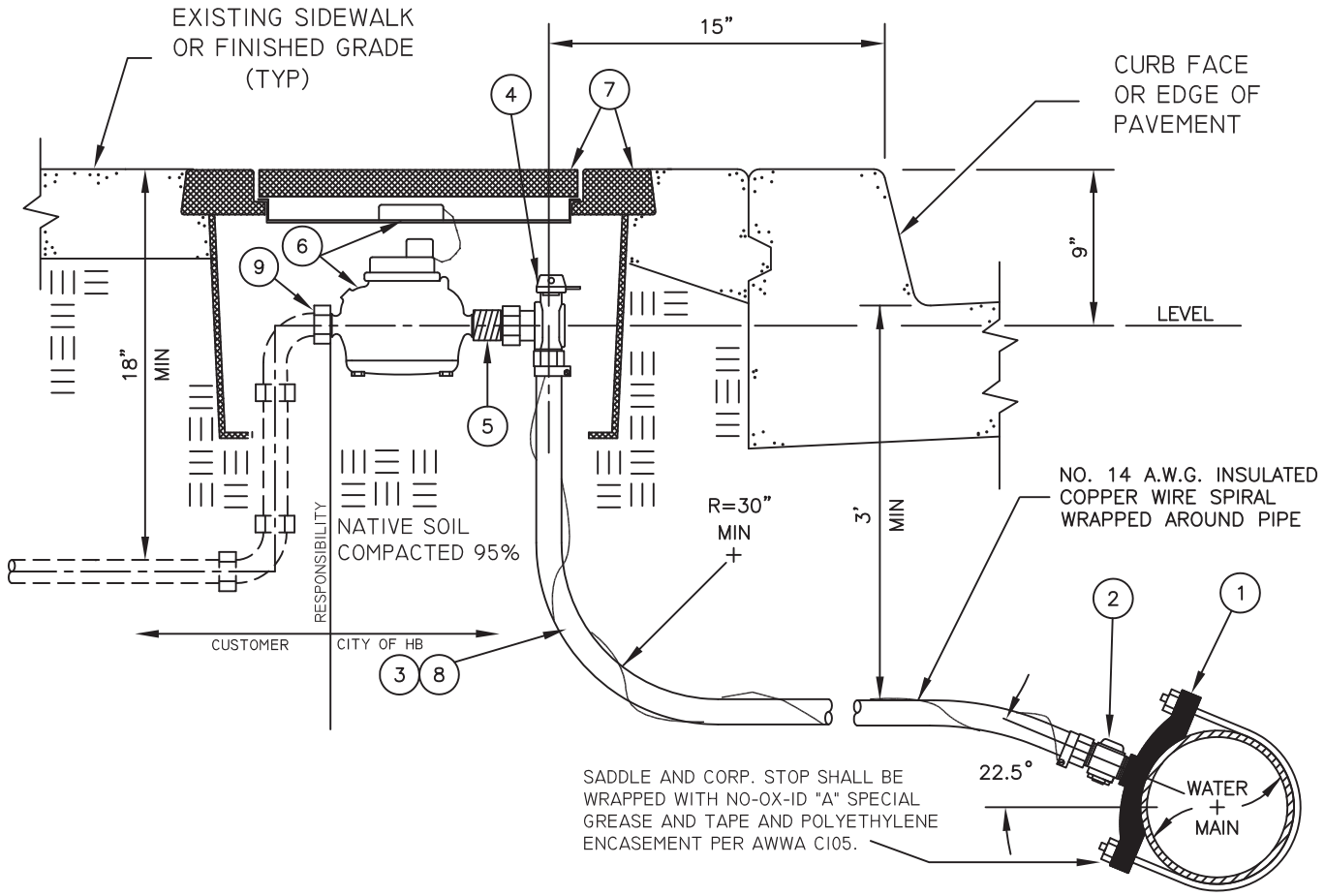

GENERAL NOTES

1.) REFER TO THE GENERAL NOTES OF STANDARD PLAN 600. 2.) REFER TO STANDARD PLAN No. 207 FOR CONSTRUCTION IN EXISTING SIDEWALKS. 3.) METER SHALL BE CENTERED HORIZONTALLY WITHIN METER BOX AND AT 90 ° TO CURB AND SHALL BE INSTALLED IN ACCORDANCE WITH THE MANUFACTURER'S WRITTEN INSTRUCTIONS. 4.) HOLESAW TYPE CUTTER REQUIRED FOR ALL TAPS. 5.) PROVIDE BACKFLOW PROTECTION AS REQUIRED. 6.) SERVICE CONNECTION TO WATER MAIN SHALL BE INSTALLED A MINIMUM OF TWO FEET FROM ANY COLLAR FITTING END OR SERVICE. 7.) METER BOX SHALL NOT BE INSTALLED WITHIN DRIVEWAY. 8.) METER SHALL BE INSTALLED LEVEL WITHIN METER BOX. 9.) WHEN METER BOX IS INSTALLED IN TRAFFIC WAY, USE TRAFFIC RATED METER BOX. 10) TRAFFIC RATED METER BOX IS REQUIRED FOR METERS CONSTRUCTED ADJACENT TO ROLLED CURB. 11) METER FASTENERS SHALL BE BRASS.

ITEM	DESCRIPTION	SPECIFICATION	QTY
1	SERVICE SADDLE.	02510.8	1
2	CORPORATION STOP, PACK-JOINT, 1".	02510.8	1
3	PE 3408 PLASTIC PIPE, 1", IRON PIPE SIZE.	02510.8	AR
4	ANGLE STOP, 1" PACK-JOINT INLET X 1" OUTLET.	02510.8	1
5	3/4" X 1" BRONZE ADAPTOR.	02510.8	1
6	3/4" WATER METER WITH AMI (Advanced Metering Infrastructure).	02083.1	1
7	POLYMER CONCRETE METER BOX, WITH ONE PIECE POLYMER CONCRETE COVER.	02084	1
8	IN CONTAMINATED SOILS, ARTERIAL ROADWAYS, OR IN CUL-DE-SAC, USE TYPE K SOFT COPPER SERVICE LINE (OMIT COPPER WIRE).	02510.8	AR
9	METER COUPLING X M.I.P. TAILPIECE.	02510.8	1

APPROVED:

CITY ENGINEER

DATE: 11/17/16

CITY OF HUNTINGTON BEACH

DEPARTMENT OF PUBLIC WORKS

1" WATER SERVICE WITH 3/4" METER

STANDARD PLAN

601

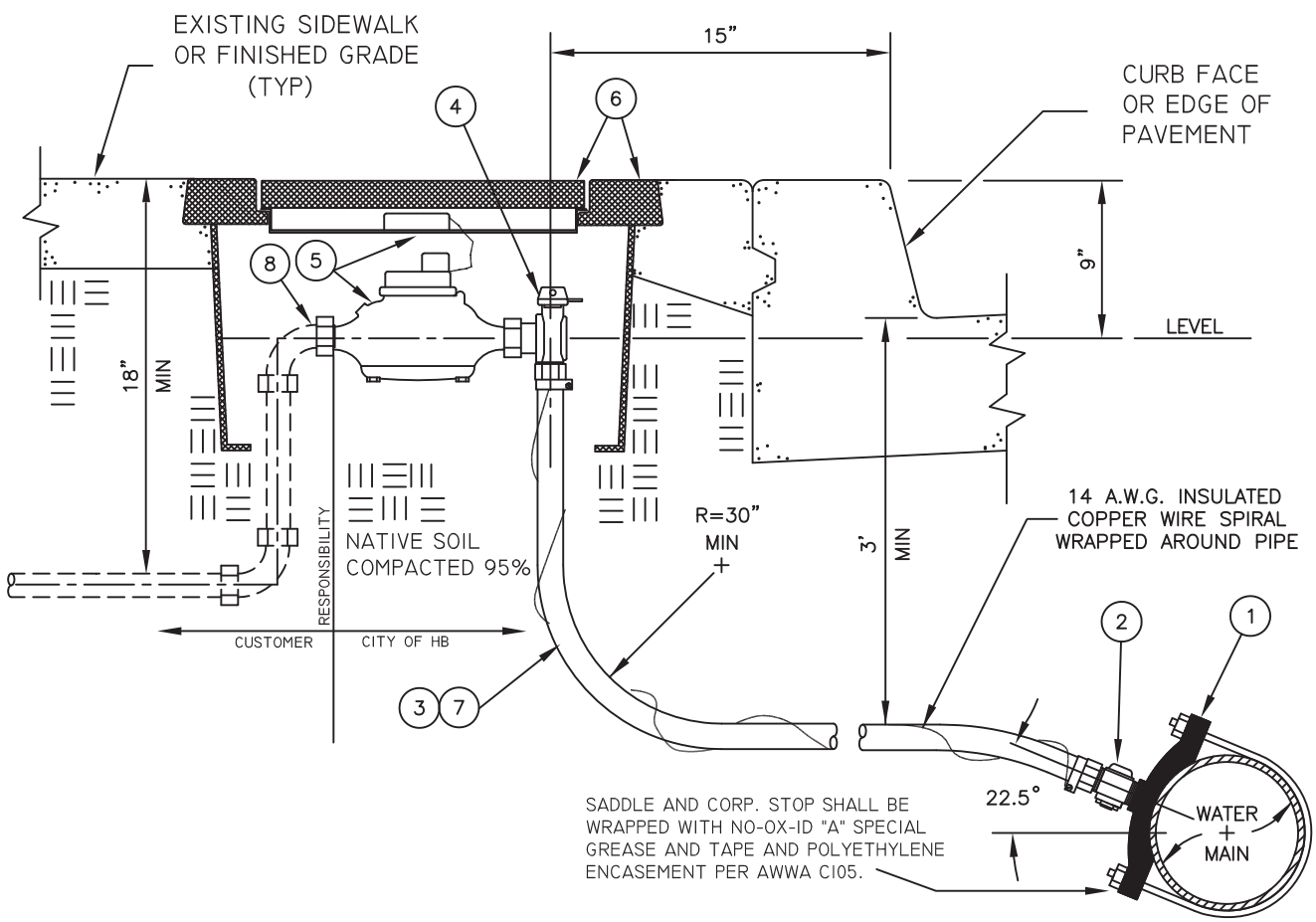

GENERAL NOTES

1.) REFER TO THE GENERAL NOTES OF STANDARD PLAN 600. 2.) REFER TO STANDARD PLAN No. 207 FOR CONSTRUCTION IN EXISTING SIDEWALKS. 3.) METER SHALL BE CENTERED HORIZONTALLY WITHIN METER BOX AND AT 90 ° TO CURB AND SHALL BE INSTALLED IN ACCORDANCE WITH THE MANUFACTURER'S WRITTEN INSTRUCTIONS. 4.) HOLESAW TYPE CUTTER REQUIRED FOR ALL TAPS. 5.) PROVIDE BACKFLOW PROTECTION AS REQUIRED. 6.) SERVICE CONNECTION TO WATER MAIN SHALL BE INSTALLED A MINIMUM OF TWO FEET FROM ANY COLLAR FITTING END OR SERVICE. 7.) METER BOX SHALL NOT BE INSTALLED WITHIN DRIVEWAY. 8.) METER SHALL BE INSTALLED LEVEL WITHIN METER BOX. 9.) WHEN METER BOX IS INSTALLED IN TRAFFIC WAY, USE TRAFFIC RATED METER BOX. 10.) TRAFFIC RATED METER BOX IS REQUIRED FOR METERS CONSTRUCTED ADJACENT TO ROLLED CURB. 11) METER FASTENERS SHALL BE BRASS

ITEM	DESCRIPTION	SPECIFICATION	QTY
1	SERVICE SADDLE.	02510.8	1
2	CORPORATION STOP, PACK-JOINT, 1".	02510.8	1
3	PE 3408 PLASTIC PIPE, 1", IRON PIPE SIZE.	02510.8	AR
4	ANGLE STOP, 1" PACK-JOINT INLET X 1" OUTLET.	02510.8	1
5	1" WATER METER WITH AMI (Advanced Metering Infrastructure).	02083.1	1
6	POLYMER CONCRETE METER BOX, WITH ONE PIECE POLYMER CONCRETE COVER.	02084	1
7	IN CONTAMINATED SOILS, ARTERIAL ROADWAYS OR IN CUL-DE-SACS, USE TYPE K SOFT COPPER SERVICE LINE (OMIT COPPER WIRE)	02510.8	AR
8	METER COUPLING X M.I.P. TAILPIECE.	02510.8	1

APPROVED:

CITY ENGINEER

DATE: 11/17/16

CITY OF HUNTINGTON BEACH

DEPARTMENT OF PUBLIC WORKS

1" WATER SERVICE WITH 1" METER

STANDARD PLAN

602

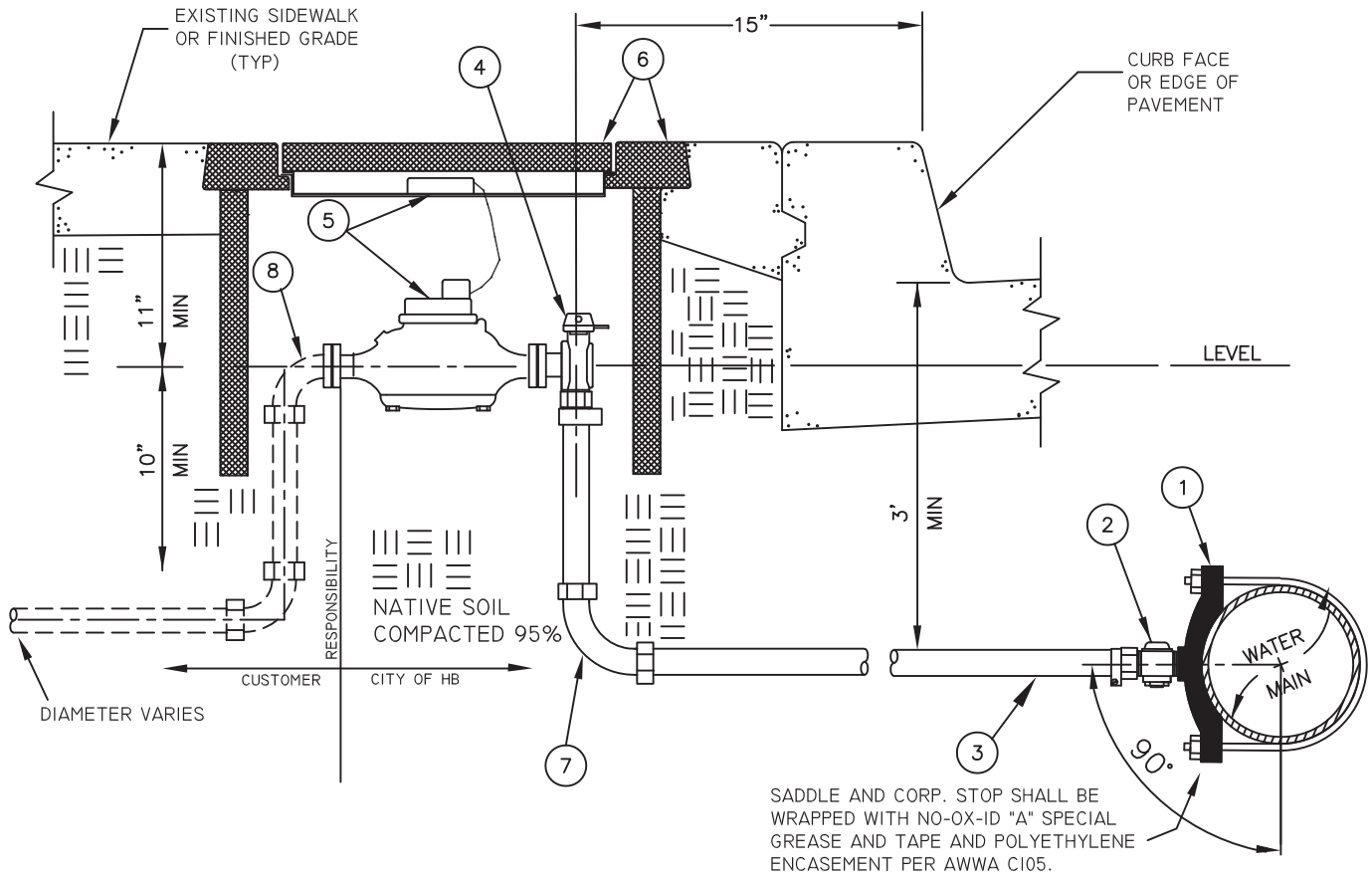

GENERAL NOTES

1.) REFER TO THE GENERAL NOTES OF STANDARD PLAN 600. 2.) REFER TO STANDARD PLAN No. 207 FOR CONSTRUCTION IN EXISTING SIDEWALKS. 3.) METER SHALL BE CENTERED HORIZONTALLY WITHIN METER BOX AND AT 90 ° TO CURB AND SHALL BE INSTALLED IN ACCORDANCE WITH THE MANUFACTURER'S WRITTEN INSTRUCTIONS. 4.) HOLESAW TYPE CUTTER REQUIRED FOR ALL TAPS. 5.) PROVIDE BACKFLOW PROTECTION AS REQUIRED. 6.) SERVICE CONNECTION TO WATER MAIN SHALL BE INSTALLED A MINIMUM OF TWO FEET FROM ANY COLLAR FITTING END OR SERVICE. 7.) METER BOX SHALL NOT BE INSTALLED WITHIN DRIVEWAY. 8.) METER SHALL BE INSTALLED LEVEL WITHIN METER BOX. 9.) WHEN METER BOX IS INSTALLED IN TRAFFIC WAY, USE TRAFFIC RATED METER BOX. 10.) TRAFFIC RATED METER BOX IS REQUIRED FOR METERS CONSTRUCTED ADJACENT TO ROLLED CURB. 11.) METER FASTENERS SHALL BE BRASS.

ITEM	DESCRIPTION	SPECIFICATION	QTY
1	SERVICE SADDLE.	02510.8	1
2	CORPORATION STOP, PACK–JOINT, 2".	02510.8	1
3	2" TYPE K SOFT COPPER, P.E. WRAPPED.	02510.8	AR
4	ANGLE STOP, 2" PACK–JOINT INLET X 1½" or 2" FLANGED (2 BOLT) OUTLET, W/BRONZE ADAPTOR	02510.8	1
5	1" WATER METER WITH AMI (ADVANCED METERING INFRASTRUCTURE), SIZED PER CPC.	02083.1	1
6	POLYMER CONCRETE METER BOX (17" X 28" X 12"), WITH TWO–PIECE POLYMER CONCRETE COVER.	02084	1
7	90° ELL, PACK–JOINT, 2", OR SWEAT.	02510.8	1
8	90° ELL, 1½"; AND/OR ADAPTOR IF REQUIRED FOR 2" METER	02510.8	1

APPROVED:

CITY ENGINEER

DATE: 11/17/16

CITY OF HUNTINGTON BEACH

DEPARTMENT OF PUBLIC WORKS

2" WATER SERVICE WITH 1" METER

STANDARD PLAN

602A

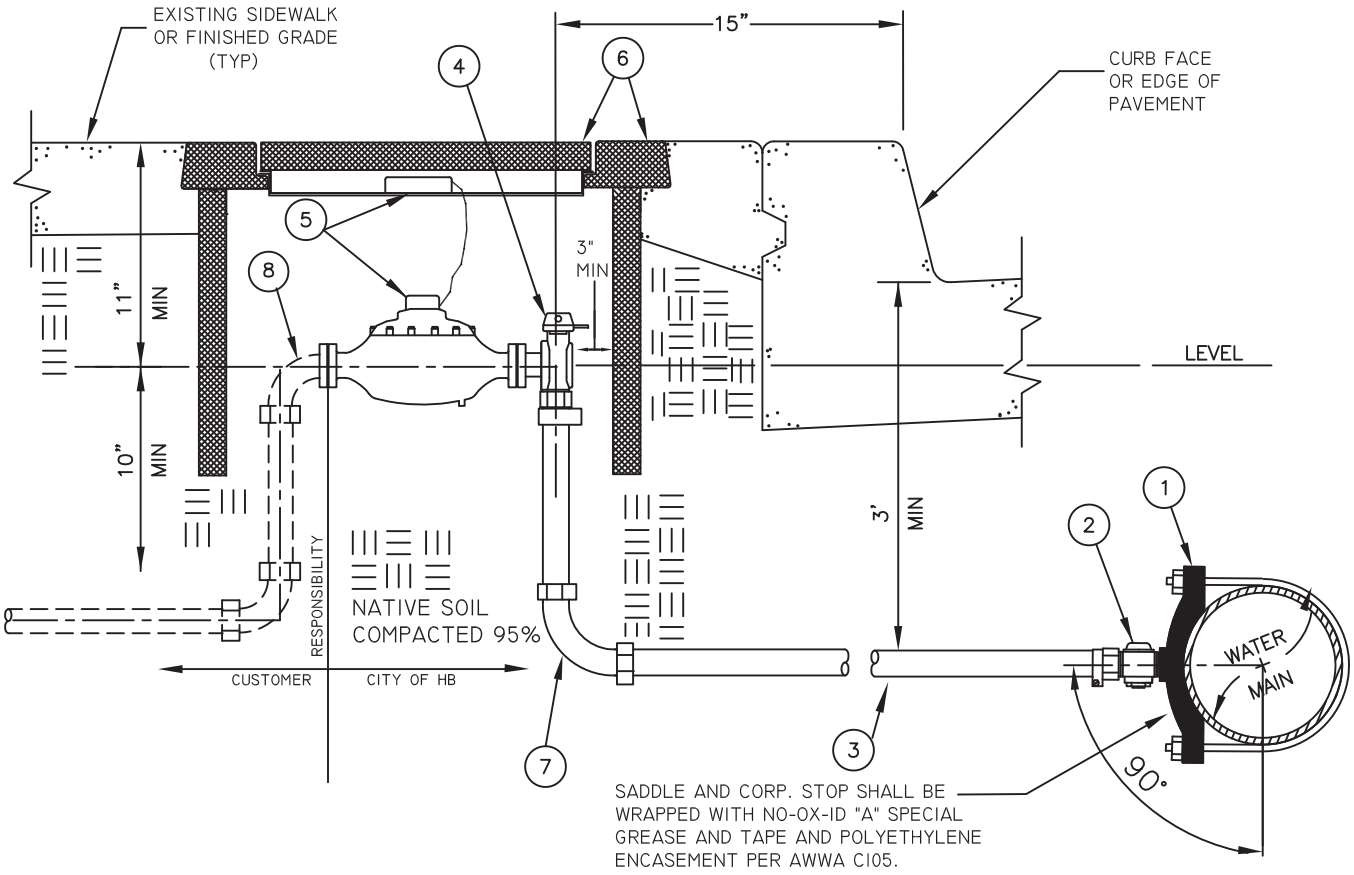

GENERAL NOTES

1.) REFER TO THE GENERAL NOTES OF STANDARD PLAN 600. 2.) REFER TO STANDARD PLAN No. 207 FOR CONSTRUCTION IN EXISTING SIDEWALKS. 3.) METER SHALL BE CENTERED HORIZONTALLY WITHIN METER BOX AND AT 90 ° TO CURB AND SHALL BE INSTALLED IN ACCORDANCE WITH THE MANUFACTURER'S WRITTEN INSTRUCTIONS. 4.) HOLESAW TYPE CUTTER REQUIRED FOR ALL TAPS. 5.) PROVIDE BACKFLOW PROTECTION AS REQUIRED. 6.) SERVICE CONNECTION TO WATER MAIN SHALL BE INSTALLED A MINIMUM OF TWO FEET FROM ANY COLLAR FITTING END OR SERVICE. 7.) METER BOX SHALL NOT BE INSTALLED WITHIN DRIVEWAY. 8.) METER SHALL BE INSTALLED LEVEL WITHIN METER BOX. 9.) AR = AS REQUIRED. 10.) METER FASTENERS SHALL BE BRASS.

ITEM	DESCRIPTION	SPECIFICATION	QTY
1	SERVICE SADDLE.	02510.8	1
2	CORPORATION STOP, PACK–JOINT, 2".	02510.8	1
3	2" TYPE K SOFT COPPER, P.E. WRAPPED..	02510.8	AR
4	ANGLE STOP, 2" PACK–JOINT INLET X 1½" or 2" FLANGED (2 BOLT) OUTLET.	02510.8	1
5	1½" OR 2" WATER METER WITH AMI (ADVANCED METERING INFRASTRUCTURE), SIZED PER CPC.	02083.1	1
6	POLYMER CONCRETE METER BOX, WITH TWO–PIECE POLYMER CONCRETE COVER.	02084	1
7	90° ELL, PACK–JOINT OR SWEAT, 2".	02510.8	1
8	90° ELL, 1½"; AND/OR ADAPTOR IF REQUIRED FOR 2" METER	02510.8	1

APPROVED:

Tom Ward

CITY ENGINEER

DATE: 11/17/16

CITY OF HUNTINGTON BEACH

DEPARTMENT OF PUBLIC WORKS

1½" OR 2" POSITIVE DISPLACEMENT METER WITH 2" WATER SERVICE ASSEMBLY

STANDARD PLAN 603

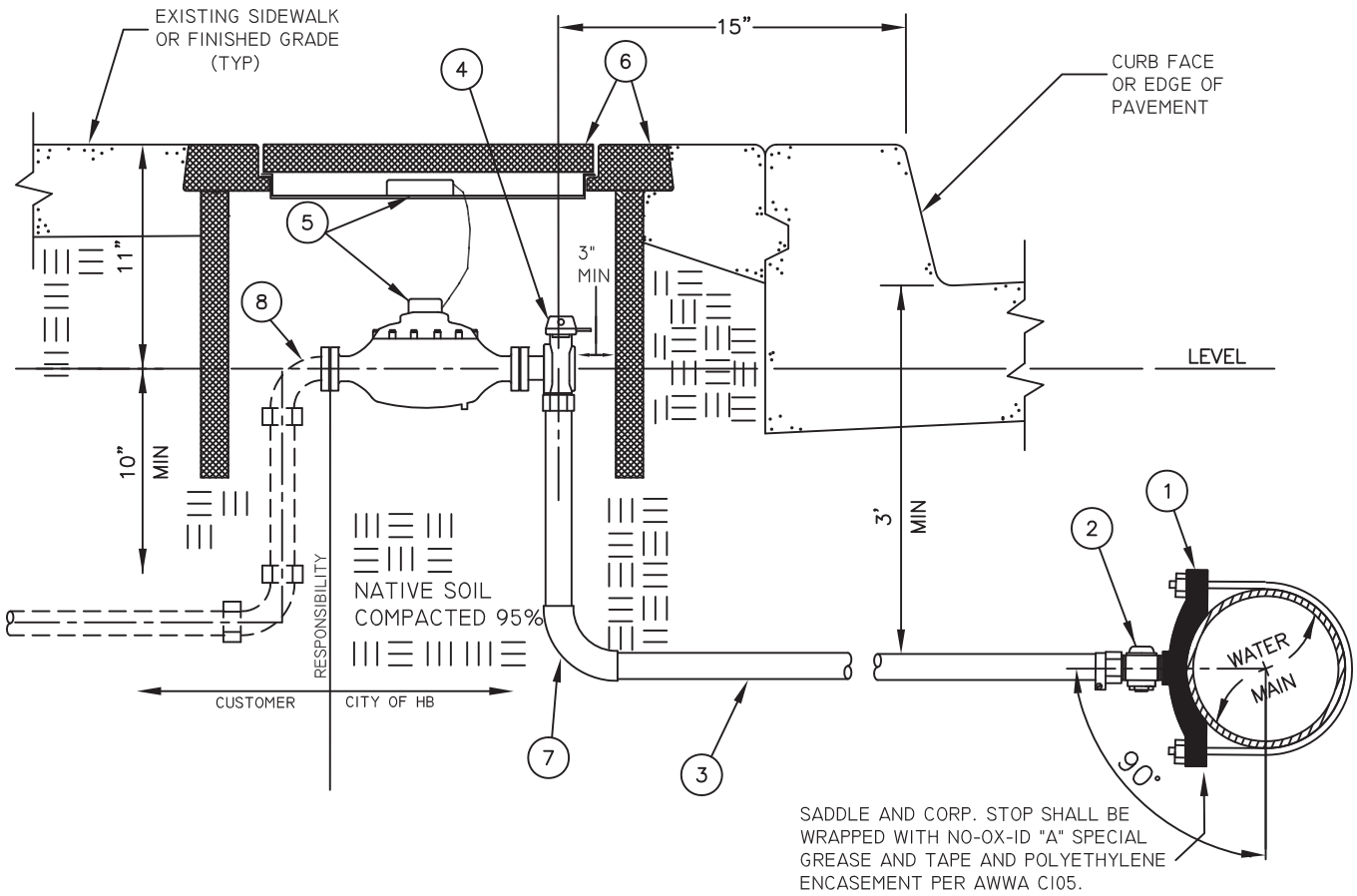

GENERAL NOTES

1.) REFER TO GENERAL NOTES OF STANDARD PLAN 600. 2.) REFER TO STANDARD PLAN No. 207 FOR CONSTRUCTION IN EXISTING SIDEWALKS. 3.) METER SHALL BE CENTERED HORIZONTALLY WITHIN METER BOX AND AT 90° TO CURB AND SHALL BE INSTALLED IN ACCORDANCE WITH THE MANUFACTURER'S WRITTEN INSTRUCTIONS. 4.) HOLESAW TYPE CUTTER REQUIRED FOR ALL TAPS. 5.) PROVIDE BACKFLOW PROTECTION AS REQUIRED. 6.) SERVICE CONNECTION TO WATER MAIN SHALL BE INSTALLED A MINIMUM OF TWO FEET FROM ANY COLLAR FITTING END OR SERVICE. 7.) METER WITHIN BOX SHALL NOT BE INSTALLED WITHIN DRIVEWAY. 8.) METER SHALL BE INSTALLED LEVEL WITHIN BOX. 9.) AR = AS REQUIRED. 10.) ALL SWEAT JOINTS OF COPPER TUBING SHALL BE BRAZED PER UPC SECTION 804.1., USING LEAD FREE SILVER SOLDER. 11.) NO SPLICES ARE PERMITTED ON SERVICES 20 FEET OR LESS BETWEEN CORP STOP AND 90° DEGREE ELL, USE ONE CONTINUOUS PIPE. 12.) ALL COPPER TUBING AND FITTINGS SHALL BE WRAPPED WITH 10 MIL POLYETHYLENE TAPED EVERY 2 FEET ON CENTER. 13.) METER FASTENERS SHALL BE BRASS.

ITEM	DESCRIPTION	SPECIFICATION	QTY
1	SERVICE SADDLE.	02510.8	1
2	CORPORATION STOP, COPPER, PACK-JOINT, 2".	02510.8	1
3	2" TYPE K SOFT COPPER, P.E. WRAPPED.	02510.8	AR
4	ANGLE STOP, 2" COPPER PACK-JOINT INLET X 1½" FLANGED (2 BOLT) OUTLET.	02510.8	1
5	1½" OR 2" WATER METER WITH AMI (ADVANCED METERING INFRASTRUCTURE).	02083.1	1
6	POLYMER CONCRETE METER BOX, WITH TWO-PIECE POLYMER CONCRETE COVER.	02084	1
7	90° ELL, PACK-JOINT, 2", OR SWEAT.	02510.8	1
8	90° ELL, 2".	02510.8	1

APPROVED:

Tom Ward

CITY ENGINEER

DATE: 11/17/16

CITY OF HUNTINGTON BEACH

DEPARTMENT OF PUBLIC WORKS

1½" OR 2" COPPER
WATER SERVICE INSTALLATION

STANDARD PLAN
603A

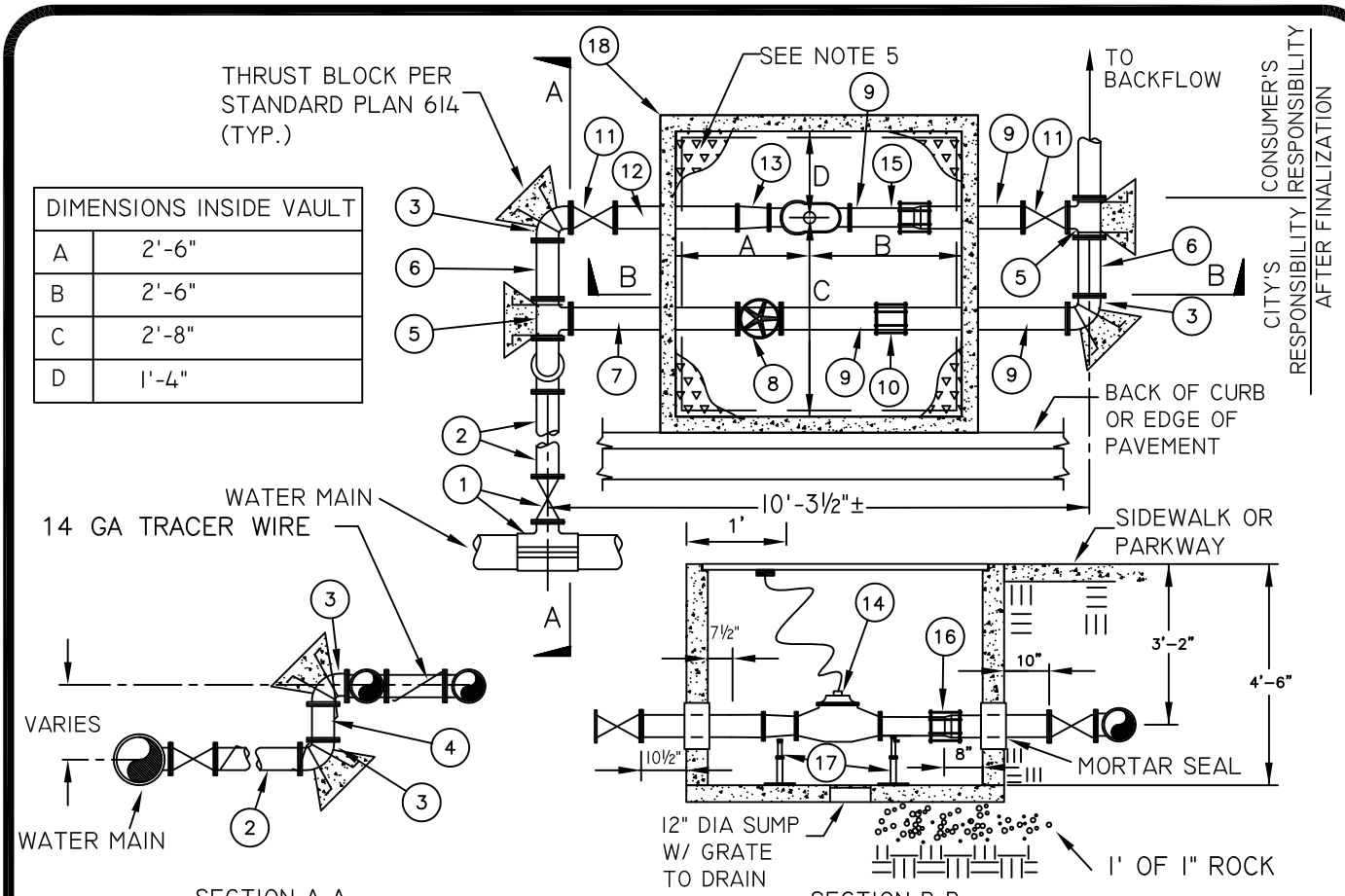

DIMENSIONS INSIDE VAULT	
A	2'-6"
B	2'-6"
C	2'-8"
D	1'-4"

NOTES:
1. LOCATION SHOWN IS STANDARD LOCATION, ALL OTHER LOCATIONS SHALL BE APPROVED BY THE CITY ENGINEER.
2. ENTIRE INSTALLATION SHALL BE WITHIN PUBLIC R/W OR A DEDICATED EASEMENT.
3. REFER TO GENERAL NOTES, STD. PLAN 100, PUBLIC WORKS STANDARDS, AND STD. SPECS.
4. CONTRACTOR TO SUPPLY HOT DIPPED GALVANIZED HEAVY CHAIN TO LOCK HANDWHEEL ON VALVE, HBWD WILL FURNISH LOCK.
5. UTILITY BOX COVERS TO BE HOT DIPPED GALVANIZED WITH "SLIP-NOT", INCLUDING HINGES, AFTER FABRICATION.
6. ALL FASTENERS SHALL BE TYPE 316 STAINLESS STEEL, INCLUDING FLEX COUPLING "T-BOLTS".
7. SUMP TO BE FURNISHED WITH GRATE.
8. PROVIDE BACKFLOW PROTECTION AS REQUIRED.
9. ALL D.I. UNDERGROUND PIPING OUTSIDE VAULT SHALL BE POLYETHYLENE WRAPPED.
10. ALLOWABLE TOLERANCE ON DIMENSION = ± 2"
11. IF INSTALLATION IS WITHIN A SLOPED GRADE, REFER TO STD. 624.
12. APPLY NO-OX-ID "A SPECIAL GREASE WW" AND PROTECTIVE WRAP ON ALL BURIED FITTINGS.
13. CONTINUITY JOINT BONDING IS REQUIRED ON ALL CONTINUOUS SECTIONS OF BURIED DI PIPE AND APPURTENANCES.

ITEM	DESCRIPTION	SPEC	QTY	ITEM	DESCRIPTION	SPEC.	QTY
1	TEE AND VALVE OR 4" TAPPING TEE AND VALVE, PER STD. 619	02085.9	1	12	4" D.I. PIPE, FLG'D, TC 53, LENGTH AS REQUIRED	02510.1	1
2	4" P.V.C. PIPE, C900, DR14, LENGTH A.R.	02510.9	A.R.	13	4" X 3" CONCENTRIC REDUCER, FLG'D, CL. 350	02510.1	1
3	4" D.I. 90° ELL, CL. 350, FLANGED, P.E. WRAPPED TB PER PLAN 614	02510.1	4	14	3" COMPOUND METER (AMI), INSTALL INSULATING FLANGE KIT WHEN BOLTING TO D.I.	02083.2	1
4	4" D.I. PIPE, TC 53, FLG'D, LENGTH A.R., P.E. WRAPPED	02510.1	1	15	3" D.I. PIPE, FLG'D X PIPE END, TC 53, 6" LONG	02510.1	1
5	4" D.I. TEE, CL. 350, FLG'D, P.E. WRAPPED, T.B. PER PLAN 614	02510.1	2	16	4" X 3" REDUCING FLEX COUPLING, 316 SS	02088	1
6	4" D.I. PIPE, TC 53, FLG'D, P.E. WRAPPED, 8" LONG	02510.1	2	17	ADJUSTABLE PIPE SUPPORT PER STD. PLAN 616		4
7	4" D.I. PIPE, FLG'D, TC 53, 3' LONG	02510.1	1	18	CONCRETE VAULT & COVER	03481	1
8	4" RESILIENT SEAT VALVE, FLG'D, W/HANDWHEEL	02085.9	1				
9	4" D.I. PIPE, TC. 53, FLG'D X PIPE END, LENGTH A.R.	02510.1	3				
10	4" FLEX COUPLING	02088	1				
11	4" RESILIENT SEAT GATE VALVE, FLG'D, P.E. WRAPPED	02085.9	2				

APPROVED:

CITY ENGINEER

DATE: 3/1/19

CITY OF HUNTINGTON BEACH

DEPARTMENT OF PUBLIC WORKS

3" COMPOUND METER WITH A 4" WATER SERVICE

STANDARD PLAN

604A

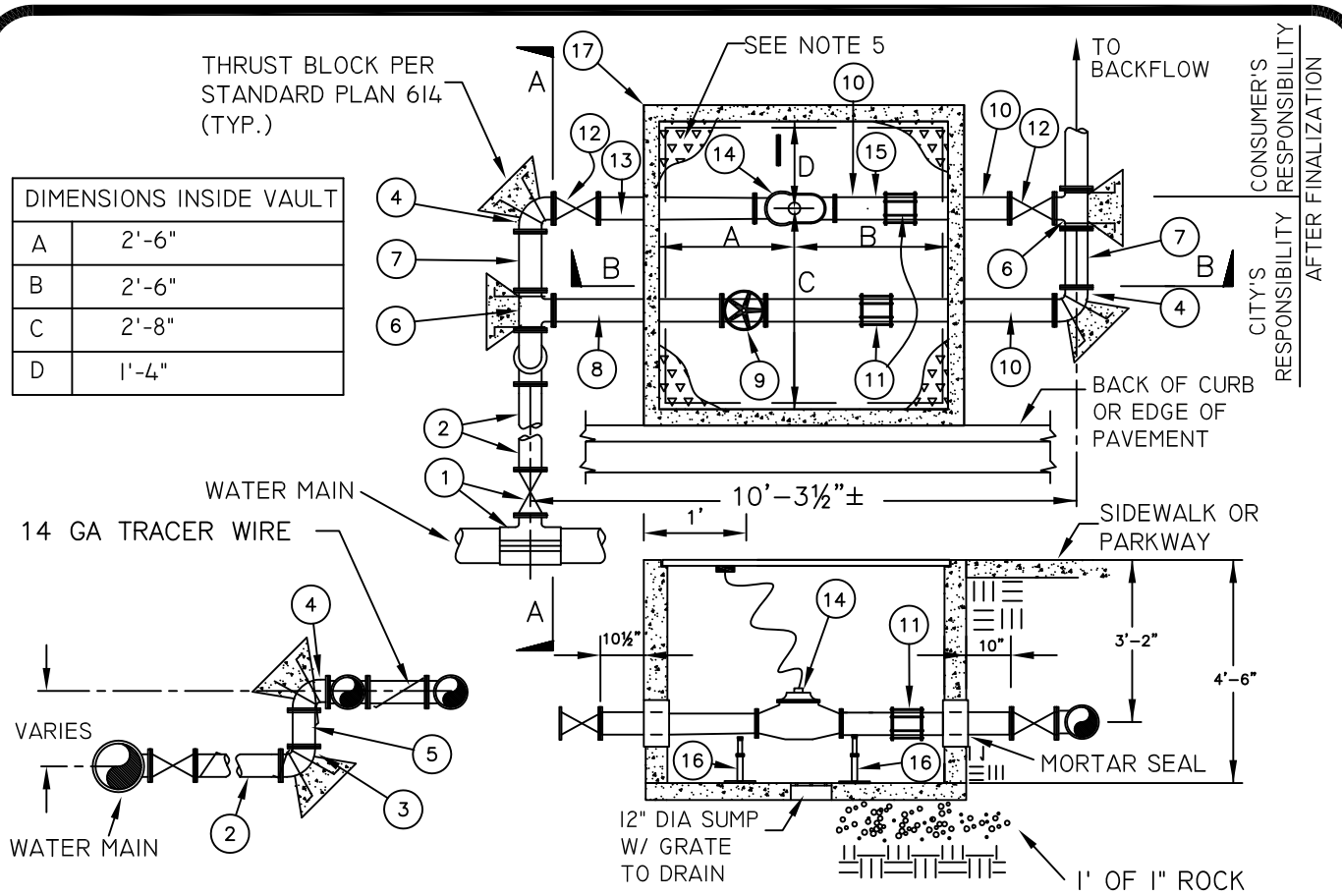

DIMENSIONS INSIDE VAULT	
A	2'-6"
B	2'-6"
C	2'-8"
D	1'-4"

NOTES:

1. LOCATION SHOWN IS STANDARD LOCATION, ALL OTHER LOCATIONS SHALL BE APPROVED BY THE CITY ENGINEER.
2. ENTIRE INSTALLATION SHALL BE WITHIN PUBLIC R/W OR A DEDICATED EASEMENT.
3. REFER TO GENERAL NOTES, STD PLAN 100, PUBLIC WORKS STANDARDS, AND STD. SPECS.
4. CONTRACTOR TO SUPPLY HOT DIPPED GALVANIZED HEAVY CHAIN TO LOCK HANDWHEEL ON VALVE, HBWD WILL FURNISH LOCK.
5. UTILITY BOX COVERS TO BE HOT DIPPED GALVANIZED WITH "SLIP-NOT", INCLUDING HINGES, AFTER FABRICATION.
6. ALL FASTENERS SHALL BE TYPE 316 STAINLESS STEEL, INCLUDING FLEX COUPLING "T-BOLTS".
7. SUMP TO BE FURNISHED WITH GRATE.
8. PROVIDE BACKFLOW PROTECTION AS REQUIRED.
9. ALL D.I. UNDERGROUND PIPING OUTSIDE VAULT SHALL BE POLYETHYLENE WRAPPED.
10. ALLOWABLE TOLERANCE ON DIMENSION = ± 2"
11. IF INSTALLATION IS WITHIN A SLOPED GRADE, REFER TO STD. 624.
12. APPLY NO-OX-ID "A SPECIAL GREASE WW" AND PROTECTIVE WRAP ON ALL BURIED FITTINGS.
13. CONTINUITY JOINT BONDING IS REQUIRED ON ALL CONTINUOUS SECTION OF BURIED DI PIPE AND APPURTENANCES.

ITEM	DESCRIPTION	SPEC	QTY	ITEM	DESCRIPTION	SPEC.	QTY
1	TEE AND VALVE OR 4" TAPPING TEE AND VALVE, PER STD. 619	02085.9	1	10	4" D.I. PIPE, TC 53, FLG'D X PIPE END, LENGTH A.R.	02510.1	3
2	4" P.V.C. PIPE, C900, CL. 150, LENGTH A.R.	02510.9	A.R.	11	4" FLEX COUPLING	02088	2
3	4" D.I. 90° ELL.,TC 53, RESTRAINED END X FLANGED TB PER PLAN 614	02510.1	1	12	4" RESILIENT SEAT GATE VALVE, FLG'D, P.E. WRAPPED	02085.9	2
4	4" D.I. 90° ELL, TC 53 FLANGED, P.E. WRAPPED TB PER PLAN 614	02510.1	3	13	4" D.I. PIPE, FLG'D, TC 53, LENGTH AS REQUIRED	02510.1	1
5	4" D.I. PIPE, TC 53, FLG'D, P.E. WRAPPED, LENGTH A.R.	02510.1	1	14	4" COMPOUND METER (AMI), INSTALL INSULATING FLANGE KIT WHEN BOLTING TO D.I.	02083.2	1
6	4" D.I. TEE, CL. 350, FLG'D, P.E. WRAPPED, T.B. PER PLAN 614	02510.1	2	15	4" D.I. PIPE, FLG'D X PIPE END, TC 53, 6" LONG	02510.1	1
7	4" D.I. PIPE, TC 53, FLG'D, P.E. WRAPPED, 8" LONG	02510.1	2	16	ADJUSTABLE PIPE SUPPORT PER STD. PLAN 616		4
8	4" D.I. PIPE, FLG'D, TC 53, 3'-0" LONG	02510.1	1	17	CONCRETE VAULT & COVER	03481	1
9	4" RESILIENT SEAT VALVE, FLG'D, W/HANDWHEEL	02085.9	1				

APPROVED:

CITY ENGINEER

DATE: 3/1/19

CITY OF HUNTINGTON BEACH

DEPARTMENT OF PUBLIC WORKS

4" COMPOUND METER AND 4" WATER SERVICE

STANDARD PLAN

604B

DIMENSIONS INSIDE VAULT	
A	3'-0"
B	3'-0"
C	3'-10"
D	2'-2"

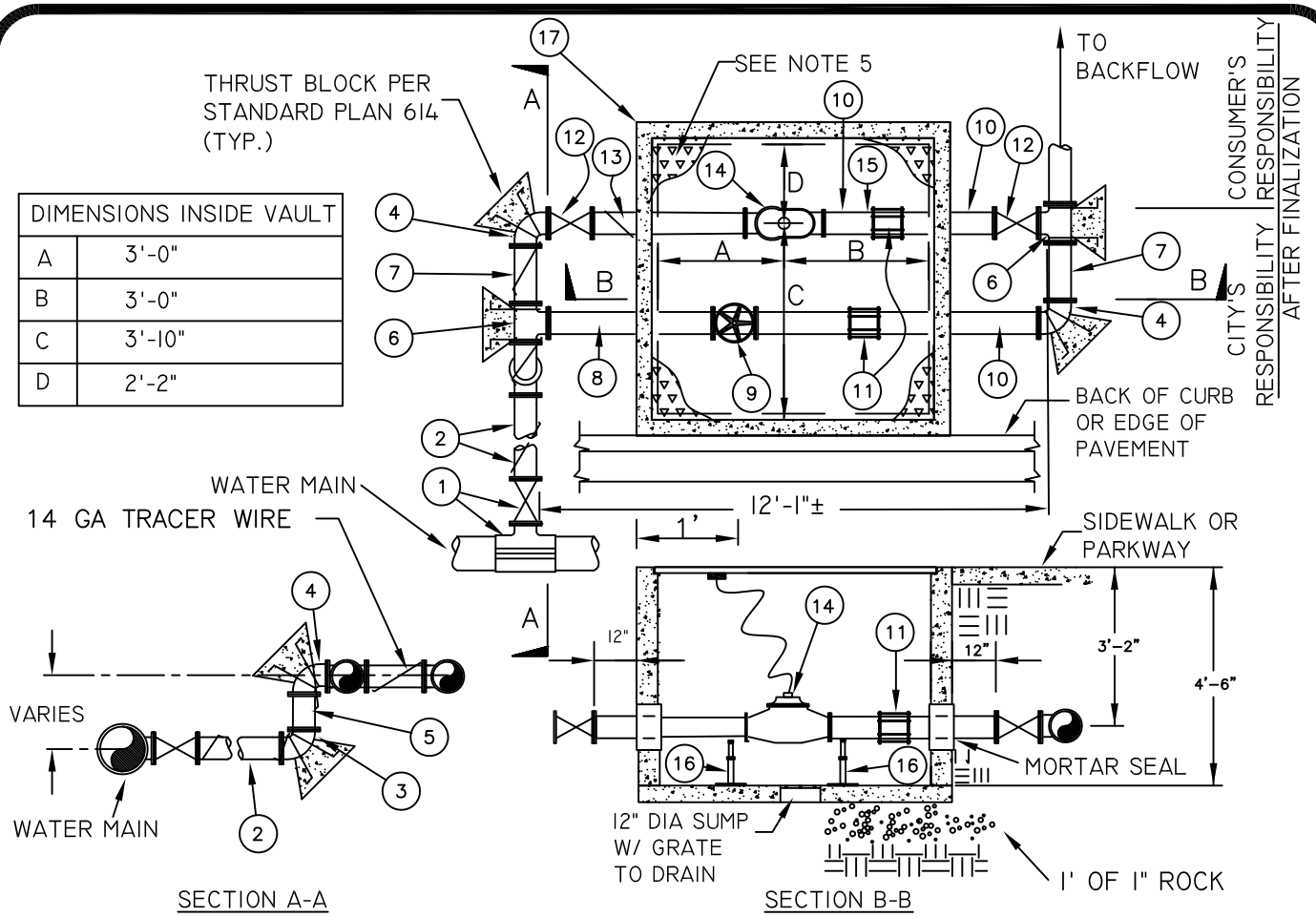

NOTES:
1. LOCATION SHOWN IS STANDARD LOCATION, ALL OTHER LOCATIONS SHALL BE APPROVED BY THE CITY ENGINEER.
2. ENTIRE INSTALLATION SHALL BE WITHIN PUBLIC R/W OR A DEDICATED EASEMENT.
3. REFER TO GENERAL NOTES, STD. PLAN 100, PUBLIC WORKS STANDARDS, AND STD. SPECS.
4. CONTRACTOR TO SUPPLY HOT DIPPED GALVANIZED HEAVY CHAIN TO LOCK HANDWHEEL ON VALVE, HBWD WILL FURNISH LOCK.
5. UTILITY BOX COVERS TO BE HOT DIPPED GALVANIZED WITH "SLIP-NOT", INCLUDING HINGES, AFTER FABRICATION.
6. ALL FASTENERS SHALL BE TYPE 316 STAINLESS STEEL, INCLUDING FLEX COUPLING "T-BOLTS".
7. SUMP TO BE FURNISHED WITH GRATE.
8. PROVIDE BACKFLOW PROTECTION AS REQUIRED.
9. ALL D.I. UNDERGROUND PIPING OUTSIDE VAULT SHALL BE POLYETHYLENE WRAPPED.
10. ALLOWABLE TOLERANCE ON DIMENSION = ± 2"
11. IF INSTALLATION IS WITHIN A SLOPED GRADE, REFER TO STD. 624.
12. APPLY NO-OX-ID "A SPECIAL GREASE WW" AND PROTECTIVE WRAP ON ALL BURIED FITTINGS.
13. CONTINUITY JOINT BONDING IS REQUIRED ON ALL CONTINUOUS SECTIONS OF BURIED DI PIPE AND APPURTENANCES.

ITEM	DESCRIPTION	SPEC	QTY	ITEM	DESCRIPTION	SPEC.	QTY
1	TEE AND VALVE OR 6" TAPPING TEE AND VALVE, PER STD. 619	02085.9	1	10	6" D.I. PIPE, TC 53, FLG'D X PLAIN END, LENGTH A.R.	02510.1	3
2	6" P.V.C. PIPE, C900 DR 14 LENGTH A.R.	02510.9	A.R.	11	6" FLEX COUPLING.	02088	2
3	6" D.I. 90° ELL., TC 53, RESTRAINED JOINT X FLANGED T.B. PER PLAN 614	02510.1	1	12	6" RESILIENT SEAT GATE VALVE, FLG'D, P.E. WRAPPED	02085.9	2
4	6" D.I. 90° ELL, TC 53, FLANGED, P.E. WRAPPED T.B. PER PLAN 614	02510.1	4	13	6" D.I. PIPE, FLG'D, TC 53, LENGTH AS REQUIRED	02085.1	1
5	6" D.I. PIPE, TC 53, FLG'D, P.E. WRAPPED, LENGTH A.R.	02510.1	1	14	6" COMPOUND METER (AMI), INSTALL INSULTING FLANGE KIT WHEN BOLTING TO D.I.	02083.2	1
6	6" D.I. TEE, CL. 350, FLG'D, P.E. WRAPPED, T.B. PER PLAN 614	02510.1	2	15	6" D.I. PIPE, FLG'D X PLAIN END, TC 53, 6" LONG	02089.1	1
7	6" D.I. PIPE, TC 53, FLG'D, P.E. WRAPPED, 1'-0" LONG	02510.1	2	16	ADJUSTABLE PIPE SUPPORT PER STD. PLAN 616		4
8	6" D.I. PIPE, FLG'D, TC 53, 3'-6" LONG	02510.1	1	17	CONCRETE VAULT & COVER	03481	1
9	6" RESILIENT SEAT VALVE, FLG'D, W/HANDWHEEL	02085.9	1				

APPROVED:

CITY ENGINEER

DATE: 3/1/19

CITY OF HUNTINGTON BEACH

DEPARTMENT OF PUBLIC WORKS

6" COMPOUND METER AND 6" WATER SERVICE

STANDARD PLAN

604C

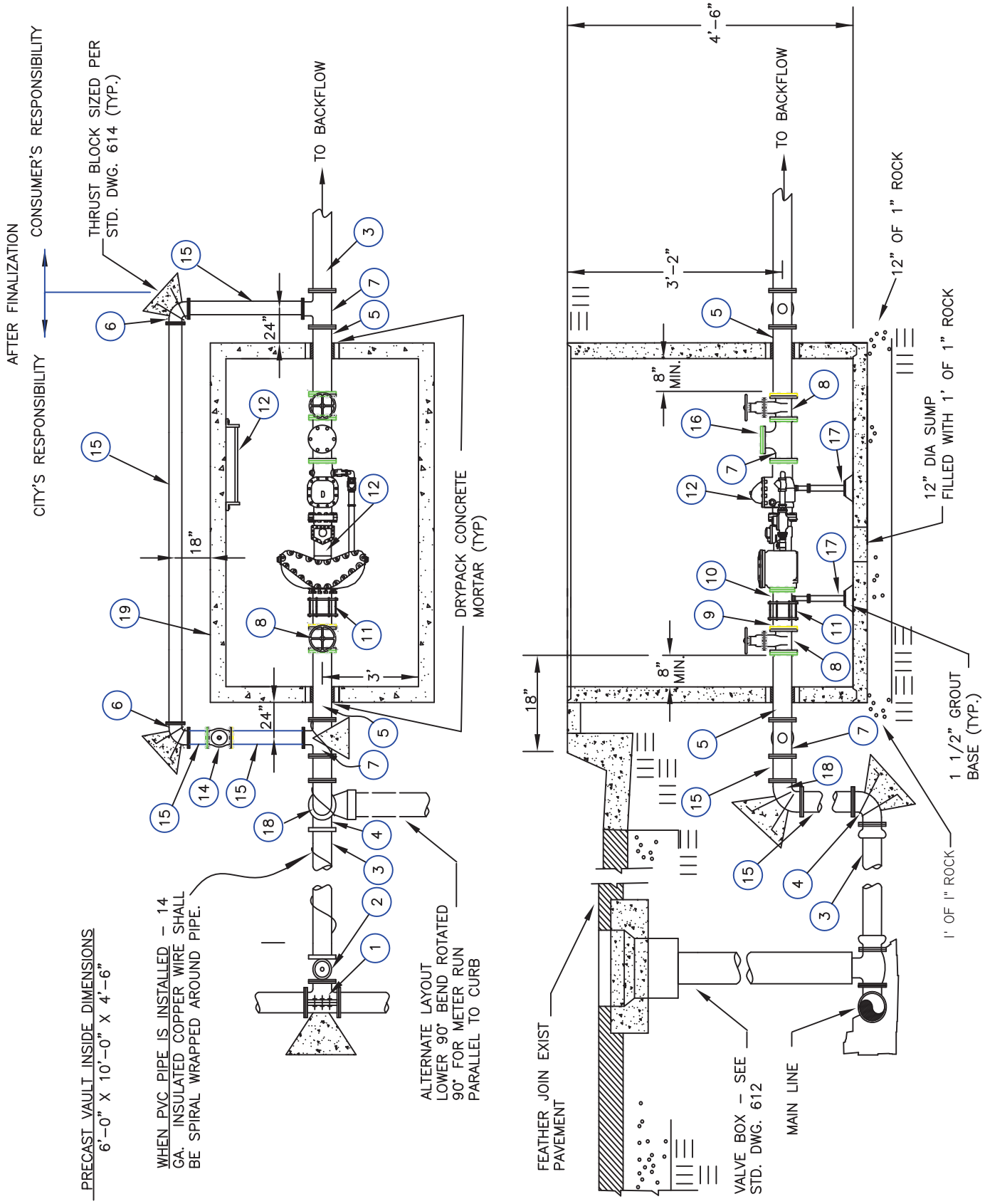

APPROVED:

CITY ENGINEER

DATE: 9/1/13

CITY OF HUNTINGTON BEACH

DEPARTMENT OF PUBLIC WORKS

4" FIRE / DOMESTIC METER ASSEMBLY

STANDARD PLAN
605A
1 OF 2

ITEM		SPECIFICATION	QTY
1	TEE OR TAPPING TEE, PER STD 619.	02085.9	1
2	CONSTRUCT VALVE, RESTRAINED X FLG.	02085.9	1
3	PVC PIPE OR D.I. PIPE LATERAL. SEE APPROVED PROJECT DRAWINGS.	02510.9	AR
4	4" DI 90° ELL, CL.350, P.E. WRAPPED, RESTRAINED X FLANGED, THRUST BLOCK PER STANDARD 614.	02510.1	1
5	4" FLG X FLG. D.I. SPOOL, TC 53, – 34–5/8" LONG.	02510.1	2
6	4" D.I. 90° ELL, CL. 350, FLG. X FLG, W/THRUST BLOCK PER PLAN 614	02510.1	2
7	4" X 4" FLANGED D.I. TEE, CL. 350, P.E. WRAPPED.	02510.1	3
8	4" RW VALVE – FLANGED, W/ HANDWHEEL.	02085.9	2
9	4" FLG X PLAIN END, D.I. SPOOL, TC 53, – 18" LONG.	02510.1	1
10	4" FLG X PLAIN END, D.I. SPOOL, TC 53, – 12" LONG	02510.1	1
11	4" FLEX COUPLING.	02088	1
12	4" FIRE / DOMESTIC METER ASSEMBLY.	02083.3	1
13	LADDER – HOT DIPPED GALVANIZED (REQUIRED ON ALL VAULTS 5–FEET OR DEEPER.)	03481	1
14	4" RW VALVE – FLANGED VALVE BOX & COVER.	02085.9	1
15	4" D.I. SPOOL – FLG. X FLG., TC 53, P.E. WRAPPED, LENGTH AS REQUIRED	02510.1	AR
16	4" D.I. BLIND FLANGE	02510.1	1
17	ADJUSTABLE PIPE SUPPORT PER STD. PLAN 616.		1
18	4" FLG. X FLG. 90° DI ELL, CL 350, P.E. WRAPPED, THRUST BLOCK PER PLAN 614	02510.1	1
19	CONCRETE VAULT & COVER.	03481	1

NOTES:

1. LOCATION SHOWN IS STANDARD LOCATION, ALL OTHER LOCATIONS SHALL BE APPROVED BY THE CITY ENGINEER.
2. ENTIRE INSTALLATION SHALL BE WITHIN PUBLIC R/W OR A DEDICATED EASEMENT.
3. REFER TO GENERAL NOTES, STD PLAN 100, PUBLIC WORKS STANDARDS, AND STD. SPECS.
4. CONTRACTOR TO SUPPLY HOT DIPPED GALVANIZED HEAVY CHAIN TO LOCK HANDWHEEL ON VALVE, HBWD WILL FURNISH LOCK.
5. UTILITY BOX COVERS TO BE HOT DIPPED GALVANIZED WITH "SLIP-NOT", INCLUDING HINGES, AFTER FABRICATION.
6. ALL FASTENERS, NUTS, BOLTS AND WASHERS SHALL BE TYPE 316 STAINLESS STEEL, INCLUDING FLEX COUPLING "T-BOLTS".
7. SUMP TO BE FURNISHED WITH GRATE.
8. PROVIDE BACKFLOW PROTECTION AS REQUIRED.
9. ALL D.I. UNDERGROUND PIPING OUTSIDE VAULT SHALL BE POLYETHYLENE WRAPPED.
10. ALLOWABLE TOLERANCE ON DIMENSION = ± 2"
11. IF INSTALLATION IS WITHIN A SLOPED GRADE, REFER TO STD. 624.
12. APPLY NO-OX-ID "A SPECIAL GREASE WW" AND PROTECTIVE WRAP ON ALL BURIED FITTINGS.
13. CONTINUITY JOINT BONDING IS REQUIRED ON ALL CONTINUOUS SECTIONS OF BURIED DI PIPE AND APPURTENANCES.

APPROVED:

CITY ENGINEER

DATE: 9/1/13

CITY OF HUNTINGTON BEACH

DEPARTMENT OF PUBLIC WORKS

4" FIRE / DOMESTIC METER ASSEMBLY

STANDARD PLAN

605A

2 OF 2

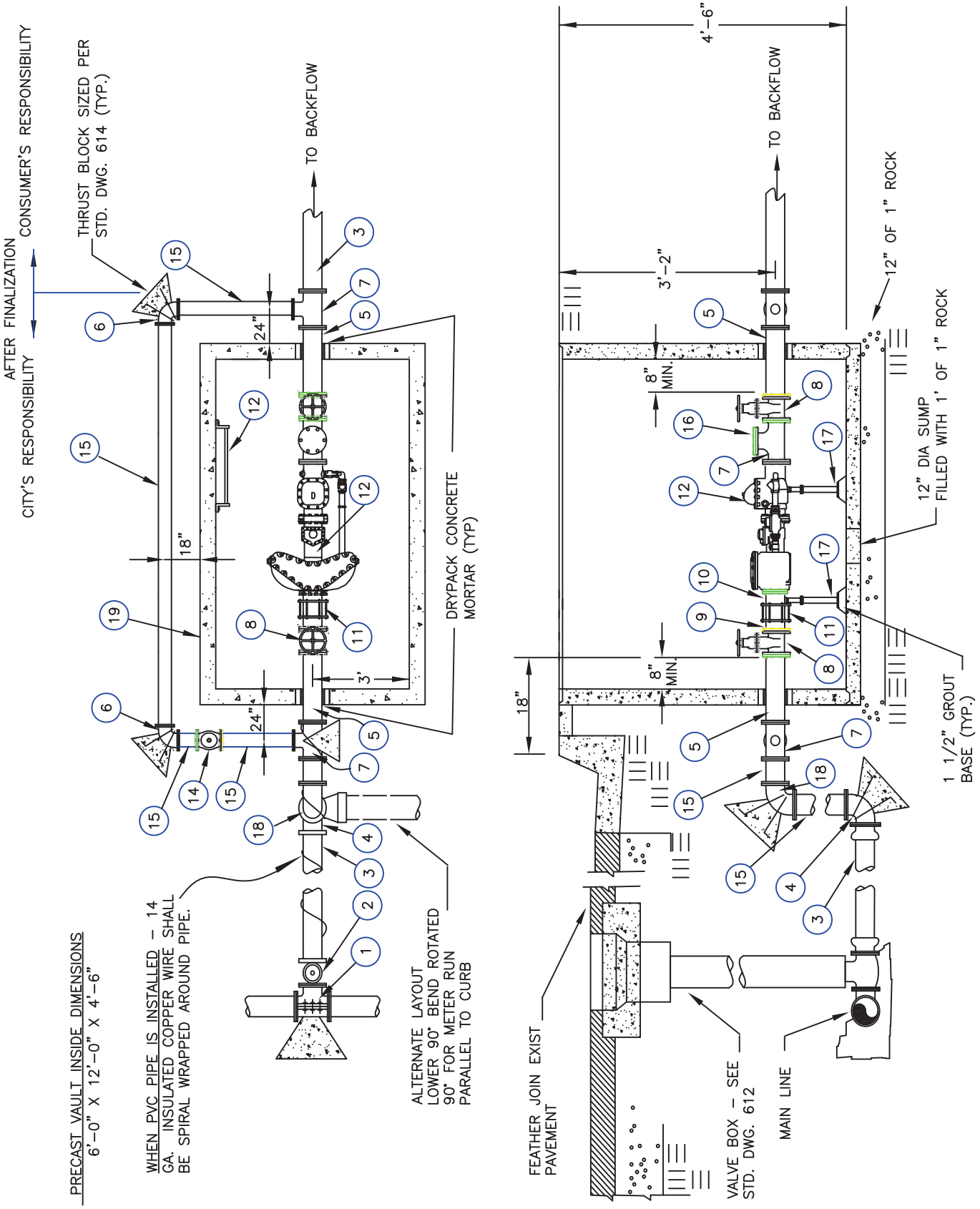

APPROVED:

CITY ENGINEER

DATE: 10/1/11

CITY OF HUNTINGTON BEACH

DEPARTMENT OF PUBLIC WORKS

6" FIRE / DOMESTIC METER ASSEMBLY

STANDARD PLAN
605B
1 OF 2

ITEM		SPECIFICATION	QTY
1	TEE OR TAPPING TEE, PER STD 619.	02085.9	1
2	CONSTRUCT VALVE, RESTRAINED X FLG.	02085.9	1
3	PVC PIPE OR D.I. PIPE LATERAL. SEE APPROVED PROJECT DRAWINGS.	02510.9	AR
4	6" DI 90' ELL, CL 350, FLG. X RESTRAINED, P.E. WRAPPED, THRUST BLOCK PER STANDARD 614.	02510.1	1
5	6" FLG X FLG. D.I. SPOOL, TC 53, – 37–1/8" LONG.	02510.1	2
6	4" D.I. 90° ELL FLG. X FLG, CL 350, THRUST BLOCK PER PLAN 614	02510.1	2
7	6" X 4" FLANGED D.I. TEE, CL 350, P.E. WRAPPED	02510.1	3
8	6" RW VALVE – FLANGED, W/ HANDWHEEL.	02085.9	2
9	6" FLG X PLAIN END, D.I. SPOOL, TC 53, – 18" LONG.	02510.1	1
10	6" FLG X PLAIN END, D.I. SPOOL, TC 53, – 12" LONG	02510.1	1
11	6" FLEX COUPLING.	02088	1
12	6" FIRE / DOMESTIC METER ASSEMBLY.	02083.3	1
13	LADDER – HOT DIPPED GALVANIZED (REQUIRED ON ALL VAULTS 5–FEET OR DEEPER.)	03481	1
14	4" RW VALVE – FLANGED VALVE BOX & COVER.	02085.9	1
15	4" D.I. SPOOL – FLG. X FLG., TC 53, P.E. WRAPPED, LENGTH AS REQUIRED	02510.1	AR
16	4" D.I. BLIND FLANGE	02510.1	1
17	ADJUSTABLE PIPE SUPPORT PER STD. PLAN 616.		1
18	6" FLG. X FLG. 90° DI ELL, CL 350, P.E. WRAPPED, THRUST BLOCK PER PLAN 614	02510.1	1
19	CONCRETE VAULT & COVER.	03481	1

NOTES:

1. LOCATION SHOWN IS STANDARD LOCATION, ALL OTHER LOCATIONS SHALL BE APPROVED BY THE CITY ENGINEER.
2. ENTIRE INSTALLATION SHALL BE WITHIN PUBLIC R/W OR A DEDICATED EASEMENT.
3. REFER TO GENERAL NOTES, STD. PLAN 100, PUBLIC WORKS STANDARDS, AND STD. SPECS.
4. CONTRACTOR TO SUPPLY HOT DIPPED GALVANIZED HEAVY CHAIN TO LOCK HANDWHEEL ON VALVE, HBWD WILL FURNISH LOCK.
5. UTILITY BOX COVERS TO BE HOT DIPPED GALVANIZED WITH "SLIP-NOT", INCLUDING HINGES, AFTER FABRICATION.
6. ALL FASTENERS, NUTS, BOLTS, AND WASHERS SHALL BE TYPE 316 STAINLESS STEEL, INCLUDING FLEX COUPLING "T-BOLTS".
7. SUMP TO BE FURNISHED WITH GRATE.
8. PROVIDE BACKFLOW PROTECTION AS REQUIRED.
9. ALL D.I. UNDERGROUND PIPING OUTSIDE VAULT SHALL BE POLYETHYLENE WRAPPED.
10. ALLOWABLE TOLERANCE ON DIMENSION = ± 2"
11. IF INSTALLATION IS WITHIN A SLOPED GRADE, REFER TO STD. 624.
12. ALL BURIED FASTENERS SHALL BE GREASED AND WRAPPED WITH NO-OX-ID "A" SPECIAL AND POLYWRAPPED PER AWWA C105.
13. CONTINUITY JOIN BONDING IS REQUIRED ON ALL CONTINUOUS SECTIONS OF BURIED DI PIPE AND APPURTENANCES.

APPROVED:

CITY ENGINEER

DATE: 10/1/11

CITY OF HUNTINGTON BEACH

DEPARTMENT OF PUBLIC WORKS

6" FIRE / DOMESTIC METER ASSEMBLY

STANDARD PLAN

605B

2 OF 2

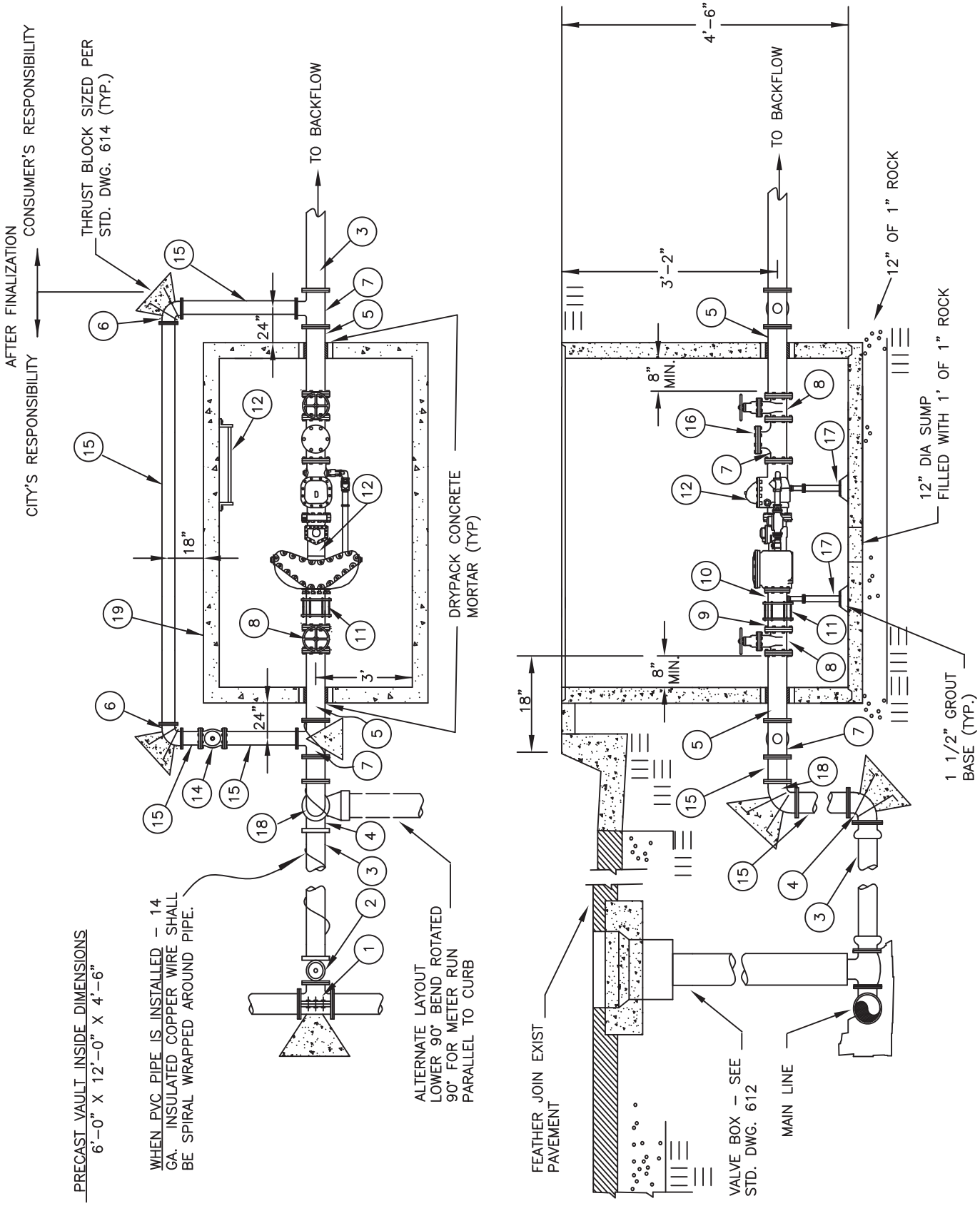

APPROVED:

CITY ENGINEER

DATE: 10/1/11

CITY OF HUNTINGTON BEACH

DEPARTMENT OF PUBLIC WORKS

8" FIRE / DOMESTIC METER ASSEMBLY

STANDARD PLAN
605C
1 OF 2

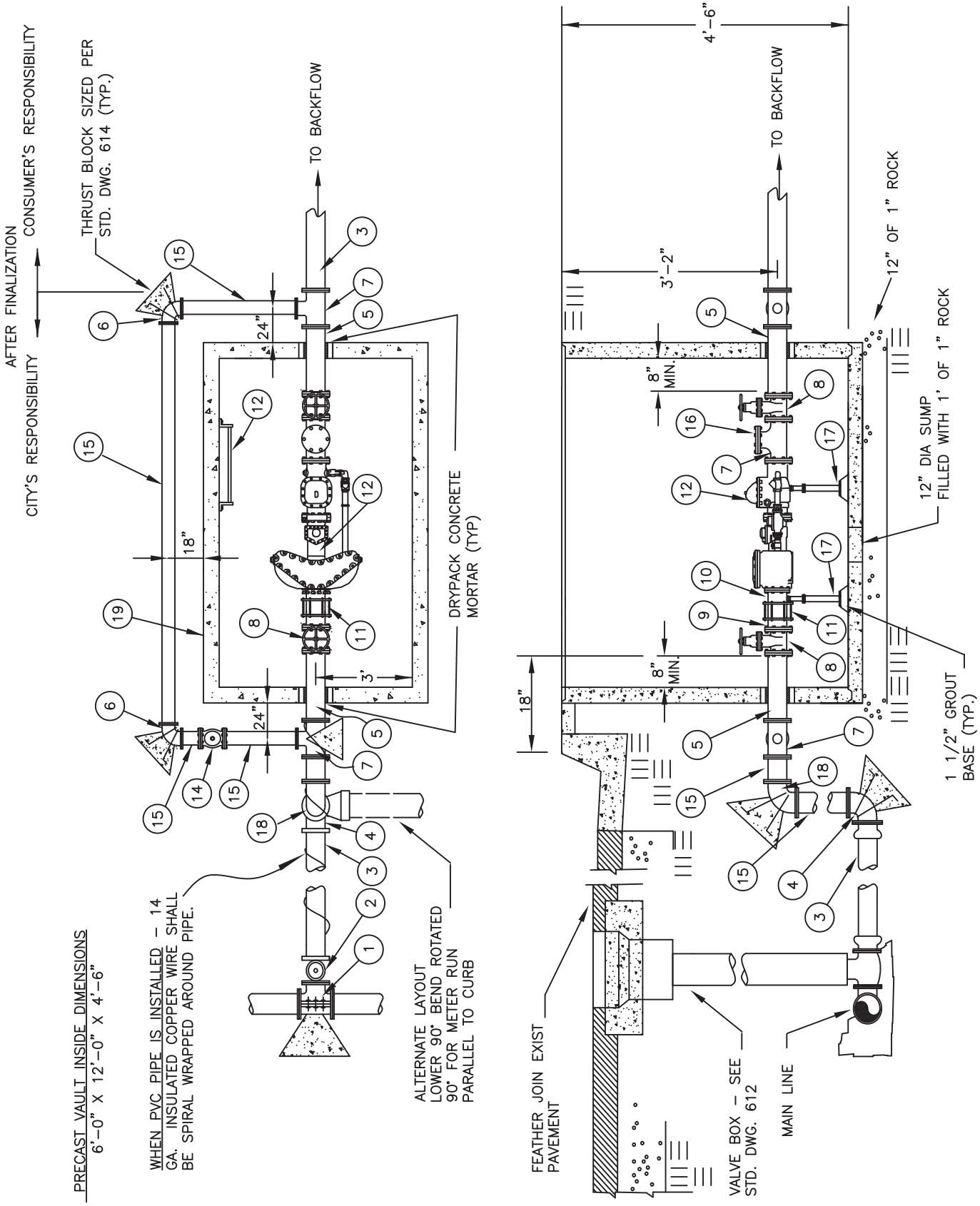

APPROVED:

CITY ENGINEER

DATE: 10/1/11

CITY OF HUNTINGTON BEACH

DEPARTMENT OF PUBLIC WORKS

8" FIRE / DOMESTIC METER ASSEMBLY

STANDARD PLAN
605C
1 OF 2

ITEM		SPECIFICATION	QTY
1	TEE OR TAPPING TEE, PER STD 619.	02085.9	1
2	CONSTRUCT VALVE, RESTRAINED X FLG.	02085.9	1
3	PVC PIPE OR D.I. PIPE LATERAL. SEE APPROVED PROJECT DRAWINGS.	02510.9	AR
4	8" DI 90' ELL, CL.350, FLG. X RESTRAINED, P.E. WRAPPED, THRUST BLOCK PER PLAN 614.	02510.1	1
5	8" FLG X FLG. D.I. SPOOL, TC 53, P.E. WRAPPED – 30–1/8" LONG.	02510.1	2
6	4" D.I. 90° ELL FLG. X FLG, CL. 350, P.E. WRAPPED, THRUST BLOCK PER PLAN 614	02510.1	2
7	8" X 4" FLANGED D.I. TEE, CL. 350, P.E. WRAPPED	02510.1	3
8	8" RW VALVE – FLANGED, W/ HANDWHEEL.	02085.9	2
9	8" FLG X PLAIN END, D.I. SPOOL, TC 53, – 18" LONG.	02510.1	1
10	8" FLG X PLAIN END, D.I. SPOOL, TC 53, – 12" LONG	02510.1	1
11	8" FLEX COUPLING.	02088	1
12	8" FIRE / DOMESTIC METER ASSEMBLY.	02083.3	1
13	LADDER – HOT DIPPED GALVANIZED (REQUIRED ON ALL VAULTS 5–FEET OR DEEPER.)	03481	1
14	4" RW VALVE – FLANGED W/ VALVE BOX & COVER.	02085.9	1
15	4" D.I. SPOOL – FLG. X FLG., TC 53, P.E. WRAPPED	02510.1	AR
16	4" D.I. BLIND FLANGE	02510.1	1
17	ADJUSTABLE PIPE SUPPORT PER STD. PLAN 616.		1
18	8" FLG. X FLG. 90° DI ELL, CL 350, FLG'D, P.E. WRAPPED, THRUST BLOCK PER STD 614	02510.1	1
19	CONCRETE VAULT & COVER.	03481	1

NOTES:

1. LOCATION SHOWN IS STANDARD LOCATION, ALL OTHER LOCATIONS SHALL BE APPROVED BY THE CITY ENGINEER.
2. ENTIRE INSTALLATION SHALL BE WITHIN PUBLIC R/W OR DEDICATED EASEMENT.
3. REFER TO GENERAL NOTES, STD PLAN 100, PUBLIC WORKS STANDARDS, AND STD. SPECS.
4. CONTRACTOR TO SUPPLY HOT DIPPED GALVANIZED HEAVY CHAIN TO LOCK HANDWHEEL ON VALVE, HBWD WILL FURNISH LOCK.
5. UTILITY BOX COVERS TO BE HOT DIPPED GALVANIZED WITH "SLIP-NOT", INCLUDING HINGES, AFTER FABRICATION.
6. ALL FASTENERS, NUTS, BOLTS, AND WASHERS SHALL BE TYPE 316 STAINLESS STEEL, INCLUDING FLEX COUPLING "T-BOLTS".
7. SUMP TO BE FURNISHED WITH GRATE.
8. PROVIDE BACKFLOW PROTECTION AS REQUIRED.
9. ALL D.I. UNDERGROUND PIPING OUTSIDE VAULT SHALL BE POLYETHYLENE WRAPPED.
10. ALLOWABLE TOLERANCE ON DIMENSION = ± 2"
11. IF INSTALLATION IS WITHIN A SLOPED GRADE, REFER TO STD. 624.
12. ALL BURIED FASTENERS SHALL BE GREASED AND WRAPPED WITH NO-OX-ID "A" SPECIAL AND POLYWRAPPED PER AWWA C105.
13. CONTINUITY JOINT BONDING IS REQUIRED ON ALL CONTINUOUS SECTIONS OF BURIED DI PIPE AND APPURTENANCES.

APPROVED:

CITY ENGINEER

DATE: 10/1/11

CITY OF HUNTINGTON BEACH

DEPARTMENT OF PUBLIC WORKS

8" FIRE / DOMESTIC METER ASSEMBLY

STANDARD PLAN

605C

2 OF 2

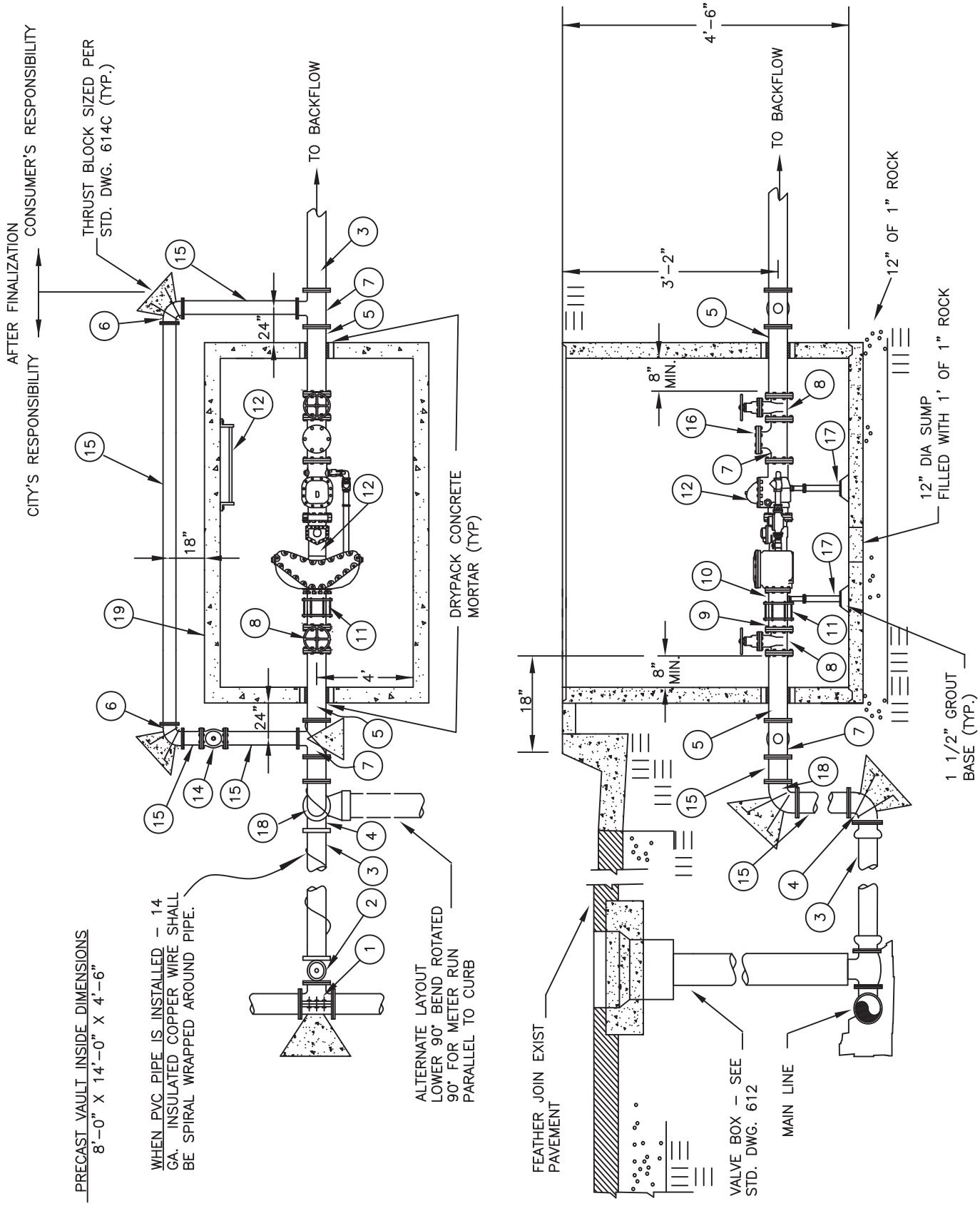

APPROVED:

CITY ENGINEER

DATE: 10/1/11

CITY OF HUNTINGTON BEACH

DEPARTMENT OF PUBLIC WORKS

10" FIRE / DOMESTIC METER ASSEMBLY

STANDARD PLAN
605D
1 OF 2

ITEM		SPECIFICATION	QTY
1	TEE OR TAPPING TEE, PER STD 619.	02085.9	1
2	CONSTRUCT VALVE, RESTRAINED X FLG.	02085.9	1
3	PVC PIPE OR D.I. PIPE LATERAL. SEE APPROVED PROJECT DRAWINGS.	02510.9	AR
4	10" DI 90° ELL, CL 350, FLG. X RESTRAINED, P.E. WRAPPED, THRUST BLOCK PER STD PLAN 614.	02510.1	1
5	10" FLG X FLG. D.I. SPOOL, TC 53, – 32–1/8" LONG.	02510.1	2
6	4" D.I. 90° ELL FLG. X FLG, CL 350, P.E. WRAPPED	02510.1	2
7	10" X 4" FLANGED D.I. TEE, CL 350, P.E. WRAPPED	02510.1	3
8	10" RW VALVE – FLANGED, W/ HANDWHEEL.	02085.9	2
9	10" FLG X PLAIN END, D.I. SPOOL, TC 53, P.E. WRAPPED – 18" LONG.	02510.1	1
10	10" FLG X PLAIN END, D.I. SPOOL, TC 53, P.E. WRAPPED – 12" LONG	02510.1	1
11	10" FLEX COUPLING WITH FOUR 3/4" STAINLESS STEEL TIE RODS.	02088	1
12	10" FIRE / DOMESTIC METER ASSEMBLY.	02083.3	1
13	LADDER – HOT DIPPED GALVANIZED (REQUIRED ON ALL VAULTS 5–FEET OR DEEPER.)	03481	1
14	4" RW VALVE – FLANGED W/ VALVE BOX & COVER.	02085.9	1
15	4" D.I. SPOOL – FLG. X FLG., TC 53, P.E. WRAPPED	02510.1	AR
16	4" D.I. BLIND FLANGE	02510.1	1
17	ADJUSTABLE PIPE SUPPORT PER STD. PLAN 616.		1
18	10" FLG. X FLG. 90° DI ELL, CL 350, P.E. WRAPPED, THRUST BLOCK PER STD PLAN 614.	02510.1	1
19	CONCRETE VAULT & COVER.	03481	1

NOTES:

1. LOCATION SHOWN IS STANDARD LOCATION, ALL OTHER LOCATIONS SHALL BE APPROVED BY THE CITY ENGINEER.
2. ENTIRE INSTALLATION SHALL BE WITHIN PUBLIC R/W OR A DEDICATED EASEMENT.
3. REFER TO GENERAL NOTES, STD PLAN 100, PUBLIC WORKS STANDARDS, AND STD. SPECS.
4. CONTRACTOR TO SUPPLY HOT DIPPED GALVANIZED HEAVY CHAIN TO LOCK HANDWHEEL ON VALVE, HBWD WILL FURNISH LOCK.
5. UTILITY BOX COVERS TO BE HOT DIPPED GALVANIZED WITH "SLIP-NOT", INCLUDING HINGES, AFTER FABRICATION.
6. ALL FASTENERS, NUTS, BOLTS AND WASHERS SHALL BE TYPE 316 STAINLESS STEEL, INCLUDING FLEX COUPLING "T-BOLTS".
7. SUMP TO BE FURNISHED WITH GRATE.
8. PROVIDE BACKFLOW PROTECTION AS REQUIRED.
9. ALL D.I. UNDERGROUND PIPING OUTSIDE VAULT SHALL BE POLYETHYLENE WRAPPED.
10. ALLOWABLE TOLERANCE ON DIMENSION = ± 2"
11. IF INSTALLATION IS WITHIN A SLOPED GRADE, REFER TO STD. 624.
12. APPLY NO-OX-ID "A SPECIAL GREASE WW" AND PROTECTIVE WRAP ON ALL BURIED FITTINGS.
13. CONTINUITY JOINT BONDING IS REQUIRED ON ALL CONTINUOUS SECTIONS OF BURIED DI PIPE AND APPURTANCES.

APPROVED:

CITY ENGINEER

DATE: 10/1/11

CITY OF HUNTINGTON BEACH

DEPARTMENT OF PUBLIC WORKS

10" FIRE / DOMESTIC METER ASSEMBLY

STANDARD PLAN

605D

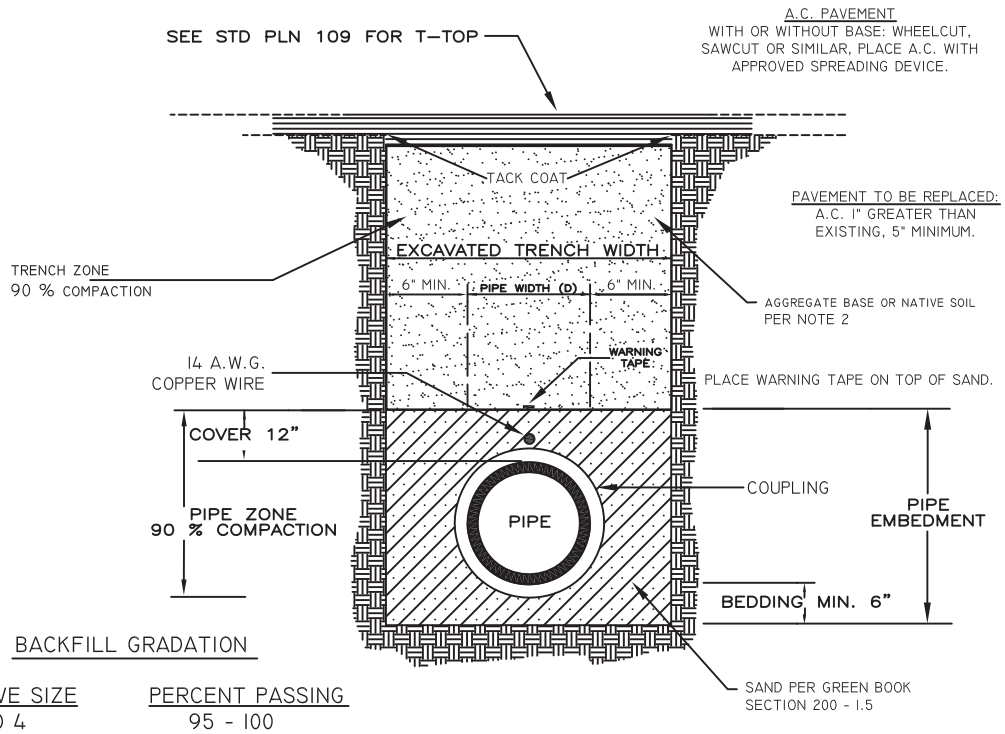

BACKFILL GRADATION

SIEVE SIZE	PERCENT PASSING
NO 4	95 - 100
NO. 30	26 - 60
NO. 100	2 - 10

GENERAL NOTES

1. BACKFILL MATERIAL FOR ALL TRENCHES SHALL HAVE A CERTIFIED SAND EQUIVALENT OF NOT LESS THAN 25 AND SHALL CONFORM TO THE FOLLOWING GRADATION (SEE ABOVE)

2. PROJECT EXCAVATION MAY BE USED AS BACKFILL MATERIAL IF IT MEETS THE REQUIREMENTS OF GREEN BOOK SECTION 306-1.3.1 SAND REQUIREMENT OF 25% MINIMUM. CONTRACTOR SHALL PAY TESTING LABORATORY TO CERTIFY BACKFILL.

3. COMPACTION METHODS SHALL CONFORM TO SECTIONS 301 AND 306-1.2 OF THE STANDARD SPECIFICATIONS FOR PUBLIC WORKS CONSTRUCTION (LATEST EDITION) WITH THE EXCEPTION OF HYDRO-HAMMER.

4. ALL TRENCHING & CONSTRUCTION SHALL COMPLY WITH THE REQUIREMENTS OF THE STATE DIVISION OF INDUSTRIAL SAFETY.

5. WARNING TAPE SHALL BE 6" WIDE PLASTIC MARKER TAPE LABELED "CAUTION POTABLE WATER LINE BELOW" AND PLACED 12" ABOVE TOP OF PIPELINE.

6. MINIMUM COVER IS DEFINED ON STANDARD PLAN 600 SHEET 1 OF 8.

APPROVED:

Tom Ward

CITY ENGINEER

DATE: 11/17/16

CITY OF HUNTINGTON BEACH

DEPARTMENT OF PUBLIC WORKS

TRENCHING AND RESURFACING DETAIL FOR MINIMUM COVER OR GREATER OVER PIPE

STANDARD PLAN

606A

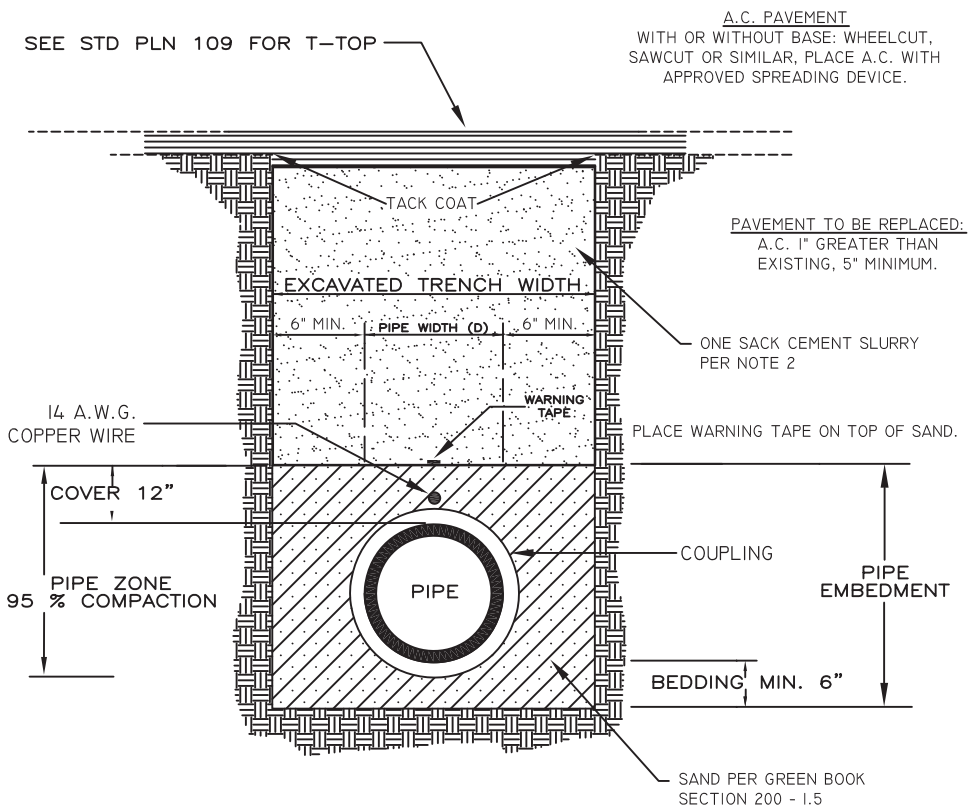

GENERAL NOTES

1. 1-SACK SLURRY, IN ACCORDANCE WITH THE STANDARD SPECIFICATIONS FOR PUBLIC WORKS CONSTRUCTION (LATEST EDITION) SECTION 201, CONCRETE CLASS 100-E-100.
2. COMPACTION METHODS SHALL CONFORM TO SECTIONS 301 AND 306-1.2 OF THE STANDARD SPECIFICATIONS FOR PUBLIC WORKS CONSTRUCTION (LATEST EDITION) WITH THE EXCEPTION OF HYDRO-HAMMER.
3. ALL TRENCHING & CONSTRUCTION SHALL COMPLY WITH THE REQUIREMENTS OF THE STATE DIVISION OF INDUSTRIAL SAFETY.
4. WARNING TAPE SHALL BE 6" WIDE PLASTIC MARKER TAPE LABELED "CAUTION POTABLE WATER LINE BELOW" AND PLACED 12" ABOVE TOP OF PIPELINE.
5. COVER MAYBE REDUCED BY MAXIMUM OF 6" COMPARED TO THE STANDARD COVER AS DEFINED BY STANDARD PLAN 600 SHEET 1 OF 8, WITH THE USE OF THIS PLAN 606B.

APPROVED:

CITY ENGINEER

DATE: 11/17/16

CITY OF HUNTINGTON BEACH

DEPARTMENT OF PUBLIC WORKS

TRENCHING AND RESURFACING DETAIL FOR LESS THAN MINIMUM COVER OVER PIPE

STANDARD PLAN

606B

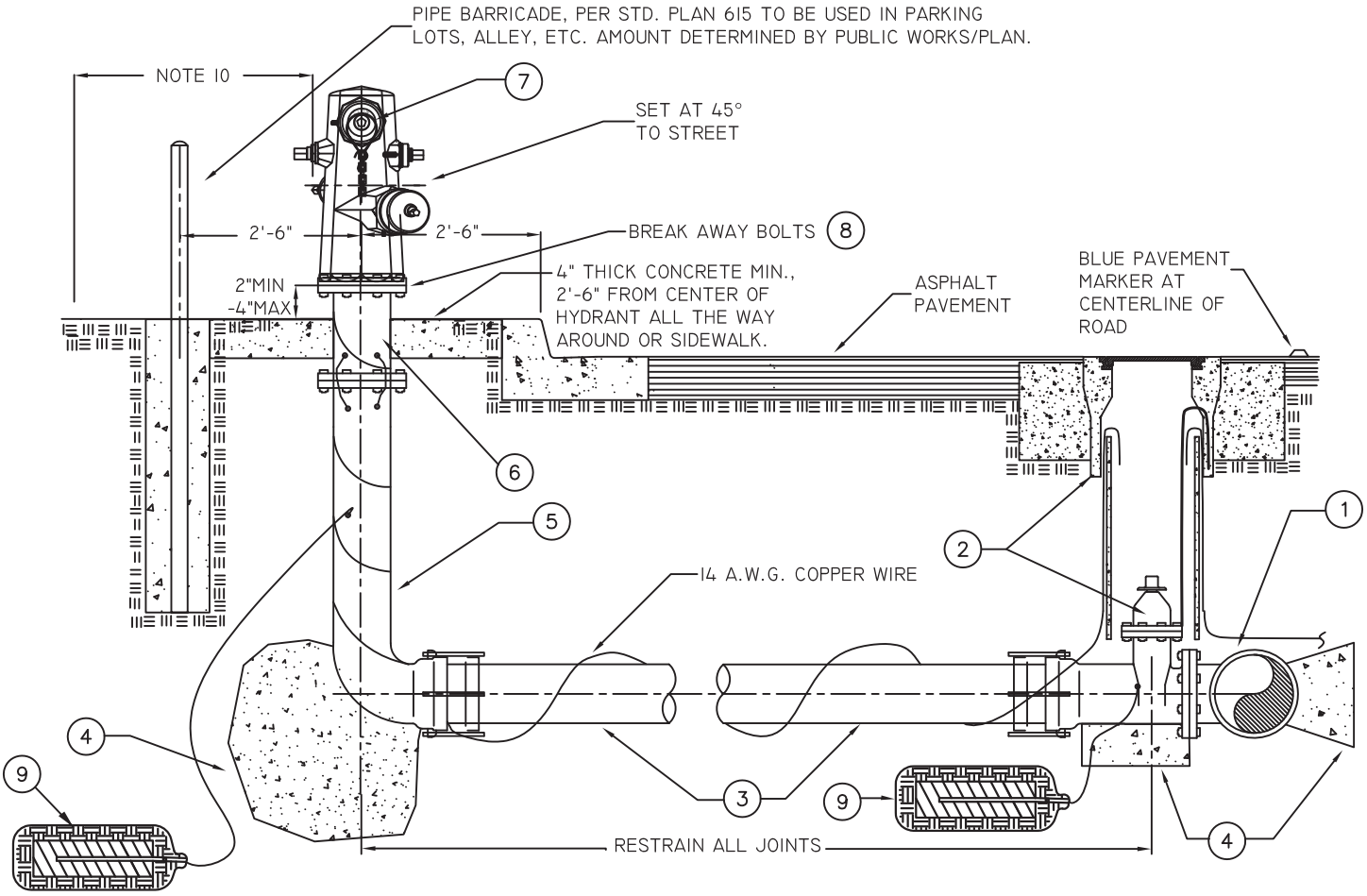

GENERAL NOTES

1.) ALL FIRE HYDRANTS TO BE PLACED AT THE B.C.R. OR PROPERTY LINE. 2.) F.H. AND PIPE BARRICADE SHALL HAVE TWO COATS OF FINISH POWDER EPOXY COAT PER SPECIFICATION 09966.1. 3.) RUBBER HOSE CAP WASHER SHALL BE FURNISHED WITH EACH OUTLET. 4.) ALL HYDRANT CAPS SHALL BE CAST IRON, EQUIPPED WITH RING AND CHAIN. 5.) ALL NUTS, BOLTS, AND WASHERS SHALL BE 316 GRADE STAINLESS STEEL. 6.) REFER TO GEN. NOTES STD. PLAN 100. 7.) NO FIRE HYDRANT SHALL BE INSTALLED CLOSER THAN 5 FEET FROM EDGE OF ANY DRIVEWAY APRON. 8.) 42" MIN. CLEARANCE OF UNOBSTRUCTED SIDEWALK. 9.) AR = AS REQUIRED. 10.) FIRE HYDRANTS SHALL BE PAINTED THE COLOR AS SPECIFIED IN SECTION 09913. 11.) APPLY NO-OX-ID "A SPECIAL WW" GREASE AND WRAP ON ALL BURIED FITTINGS.

ITEM	DESCRIPTION	SPECIFICATION	QTY
1	TEE OR TAPPING TEE, FLANGED, PER 619, W/THRUST BLOCK PER PLAN 614	02085.9	1
2	6" FLG. X MJ RESTRAINED JOINT WITH VALVE BOX PER STD. 612. VAULT LID SHALL BE YELLOW.	02085.9	1
3	6" P.V.C. PIPE, C900, DR14	02510.9	A.R.
4	CONCRETE THRUST BLOCK PER STD. PLAN 614.	03300	A.R.
5	6" X 36" C.I. BURY, MJ RESTRAINED JOINT X FLG.	02510.1	1
6	6" X 6" RISER SPOOLS, D.I., FLANGED.	02510.1	1
7	6" X 4" X 2– EACH 2–1/2" WET BARREL FIRE HYDRANT.	02513	1
8	BREAK AWAY BOLTS WITH NUT ON BOTTOM.	02513	6
9	30# ZINC ANODE PER STD. PLAN 630 & 633.		1

APPROVED:

Tom Ward

CITY ENGINEER

DATE: 11/17/16

CITY OF HUNTINGTON BEACH

DEPARTMENT OF PUBLIC WORKS

FIRE HYDRANT ASSEMBLY

STANDARD PLAN

607

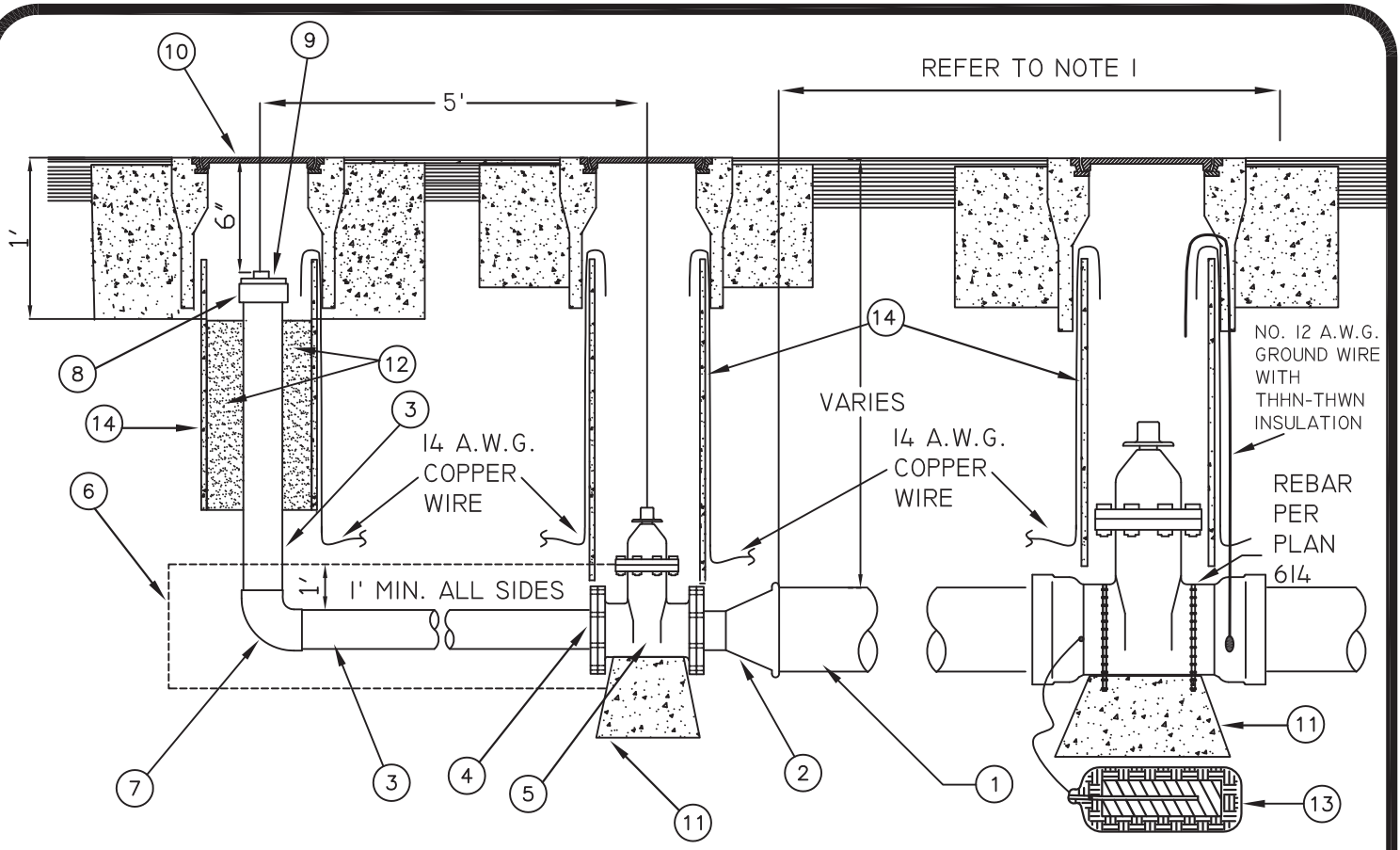

GENERAL NOTES

1.) IF WATER MAIN IS TO BE CONTINUED IN THE FUTURE AND GATE VALVE IS IN LOCATION PRESCRIBED BY STD. PLAN 600 GATE VALVE SHALL BE SAME SIZE AS WATER MAIN EXTEND WATER MAIN A MINIMUM OF 10' BEYOND GATE VALVE (I.E. ELIMINATE 4" G.V.) THEN CONNECT 4" P.V.C. DIRECTLY TO TAP PLUG ADD THRUST BLOCK PER STD. PLAN 614 TO TAPPED PLUG. 2.) ALL PLASTIC CONNECTIONS SHALL BE SOLVENT WELDED (NSF APPROVED). 3.) DO NOT CONNECT SERVICES DOWNSTREAM OF G.V. OR TO 4" P.V.C. 4.) ALL NUTS & BOLTS SHALL BE 316 GRADE STAINLESS STEEL. 5.) A.R. - AS REQUIRED. 6.) REFER TO GEN. NOTES STD. PLAN 100. 7) PER SPECIFICATION 02510.3

ITEM	DESCRIPTION	SPECIFICATION	QTY
1	P.V.C. PIPE–SIZE PER PLAN	02510.9	AR
2	PUSH ON X FLANGE REDUCER	02510.1	1
3	4" P.V.C. SCH 80	02530.9	AR
4	4" P.V.C. SCH 80 SLIP X FLANGE	02530.9	2
5	4" R/W VALVE FLANGE ENDS	02585.9	1
6	CONCRETE ENCASEMENT	03300	
7	4" P.V.C. SCH 80 SLIP 90 ELBOW	02530.9	1
8	4" P.V.C. SCH 80 SLIP X FPT ADAPTER	02530.9	1
9	4" P.V.C. SCH 80 THREADED PLUG	02530.9	1
10	VALVE BOX–PER STD 612	02085.9	3
11	THRUST BLOCK–PER STD. PLAN 614	03300	AR
12	AGGREGATE BASE	02060	AR
13	ZINC ANODE PER STD PLAN 630 & 633		1
14	VALVE TILE	02085.9	3

APPROVED:

CITY ENGINEER

DATE: 9/1/13

CITY OF HUNTINGTON BEACH

DEPARTMENT OF PUBLIC WORKS

4" BLOW–OFF ASSEMBLY

STANDARD PLAN

608

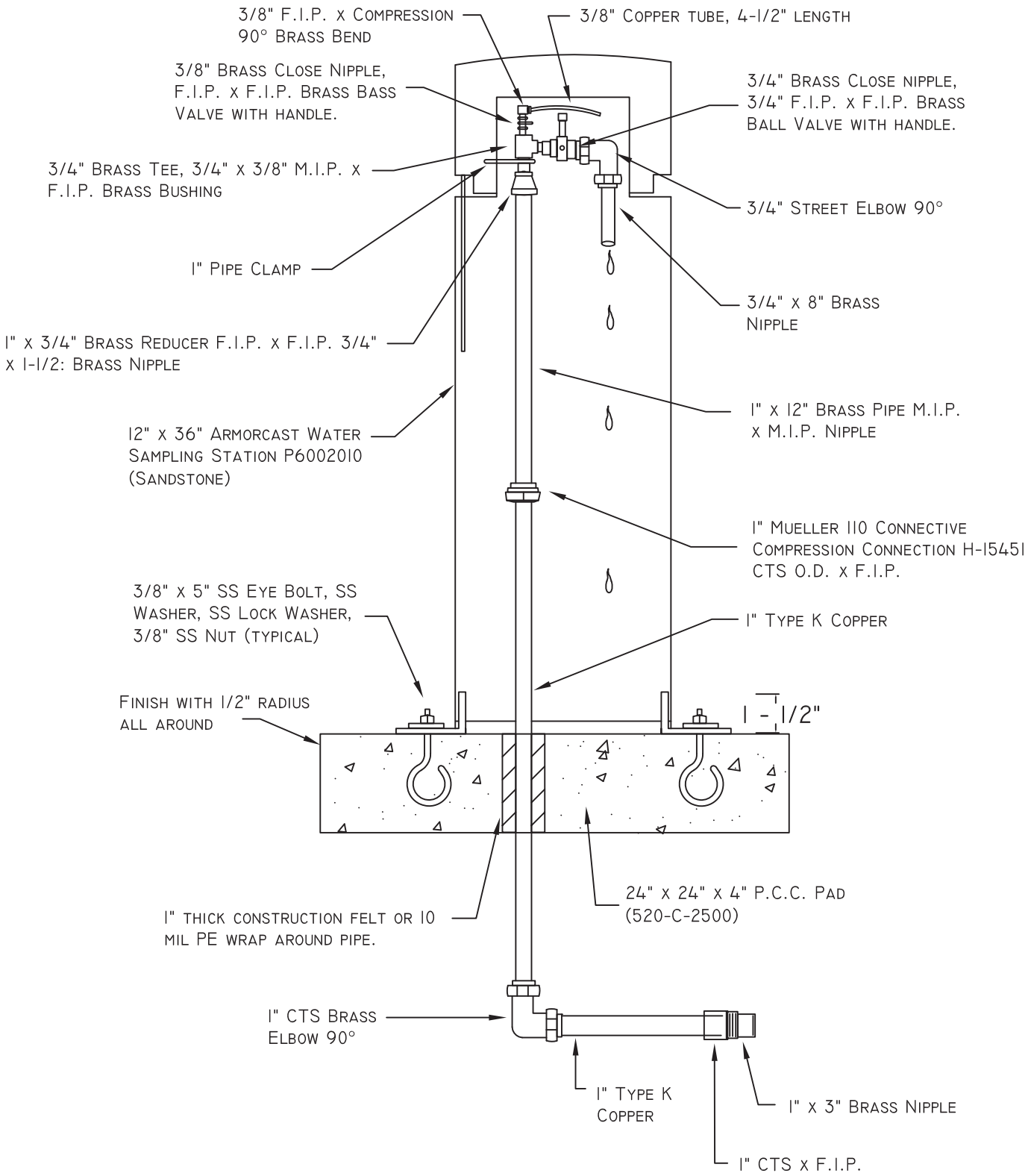

APPROVED:

Tom Dabel

CITY ENGINEER

DATE: 11/17/16

CITY OF HUNTINGTON BEACH

DEPARTMENT OF PUBLIC WORKS

WATER QUALITY SAMPLING STATION DETAIL

STANDARD PLAN

608A

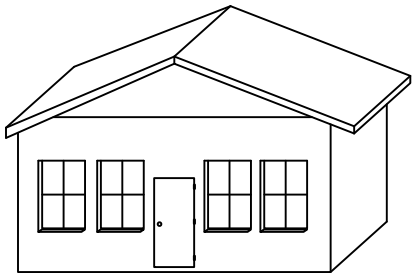

SINGLE FAMILY RESIDENTIAL (INCLUDING DUPLEX)
1" TO 2" DIAMETER WATER SERVICE
FOR METER UPSIZE OR NEW WATER METER SERVICE ONLY

USE STANDARD

609 PAGE 2	BACKFLOW PROTECTION NOTES
609B	RESIDENTIAL FIRE AND DOMESTIC DOUBLE CHECK VALVE BACKFLOW ASSEMBLY (DCV)

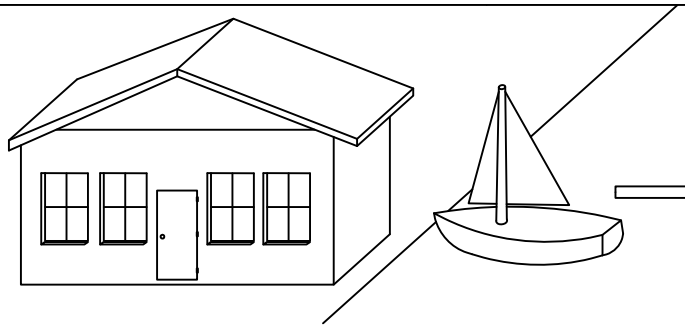

WATER FRONT SINGLE FAMILY RESIDENTIAL (INCLUDING DUPLEX)
1" TO 2" DIAMETER WATER SERVICE
FOR METER UPSIZE OR NEW WATER METER SERVICE ONLY

USE STANDARD

609 PAGE 2	BACKFLOW PROTECTION NOTES
609C	RESIDENTIAL FIRE AND DOMESTIC REDUCED PRESSURE PRINCIPAL DEVICE (RPPD)

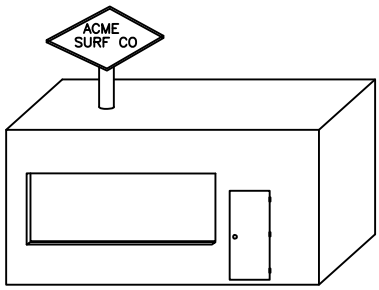

SMALL COMMERCIAL, INDUSTRIAL FACILITIES,
OR MULTI FAMILY RESIDENTIAL
1" TO 2" DIAMETER WATER SERVICE

USE STANDARD

609 PAGE 2	BACKFLOW PROTECTION NOTES
609A	1" TO 2" RPPD
618	2.5" THROUGH 10" DOUBLE CHECK DETECTOR ASSEMBLY (DCDA) (FIRE SERVICE ONLY)

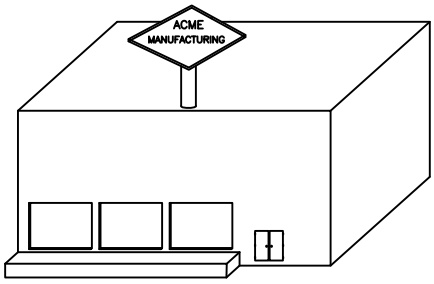

LARGE COMMERCIAL OR INDUSTRIAL FACILITIES
OR MULTI FAMILY RESIDENTIAL
3" TO 10" DIAMETER WATER SERVICE

USE STANDARD

609 PAGE 2	BACKFLOW PROTECTION NOTES
609D	3" THROUGH 10" RPPD
618	2.5" THROUGH 10" DOUBLE CHECK DETECTOR ASSEMBLY (DCDA) (FIRE SERVICE ONLY)

APPROVED:

CITY ENGINEER

DATE: 02/15/17

CITY OF HUNTINGTON BEACH

DEPARTMENT OF PUBLIC WORKS

BACKFLOW STANDARD PLANS
OVERVIEW

STANDARD PLAN
609
PAGE 1

BACKFLOW PROTECTION

A. All industrial, commercial and multi-family dwelling service connections shall have appropriate backflow protection installed and maintained by owner.

B. All residential services to combination fire and domestic use shall have double check valve backflow assembly installed (except residential water front properties shall have RPPD installed).

C. All backflow prevention devices must be tested by a certified tester at least annually and immediately after installation, relocation or repair. No new service shall be deemed acceptable until tested and certified after installation.

D. All backflow prevention devices must be U.S.C listed and approved by the state health department.

E. Any water system provided with a check valve, backflow preventer, or any other normally closed device that prevents dissipation of building pressure back into the water main shall be provided with an approved, listed, and adequately sized expansion tank or other approved device having a similar function to control thermal expansion, per building division.

F. Existing fire services requiring repairs shall have the backflow protection upgraded to comply with std. plan 618, as a minimum and shall require a sub-approval/permit clearance by a utility cross-connection control specialist, and fire department inspector. Fire department connection (FDC) size, location, and elevation per fire department requirements and will require separate permit from fire depatment.

G. After abandonment and removal of check-valve and vault, repair pavement per STD 606 or replace sidewalk per city standard.

H. All separate irrigation water service connections shall have separate RPPD's as approved by the utility cross-connection control specialists.

I. All work pertaining to backflow devices shall be inspected by the public works water inspector. For non-residential properties all piping between meter and backflow device shall also be inspected by the utility cross connection control specialist. For residential properties all piping between meter and backflow device shall be inspected by building division.

J. No person shall fill special use tanks, tankers, or vaults containing sewage, pesticides, fertilizers, unapproved auxiliary water, or toxic chemicals or their residues except at a location equipped with an approved air gap (2 x diameter of supply pipe with a minimum gap of 1"). No supplier of water shall permit the filling of such special use containers except at locations so equipped, refer to standard plan 609E.

K. Minimum meter and backflow device size is per fire department and/or building division requirements.

APPROVED: Tom Ward CITY ENGINEER DATE: 02/15/17	CITY OF HUNTINGTON BEACH DEPARTMENT OF PUBLIC WORKS BACKFLOW PROTECTION NOTES	STANDARD PLAN 609 PAGE 2

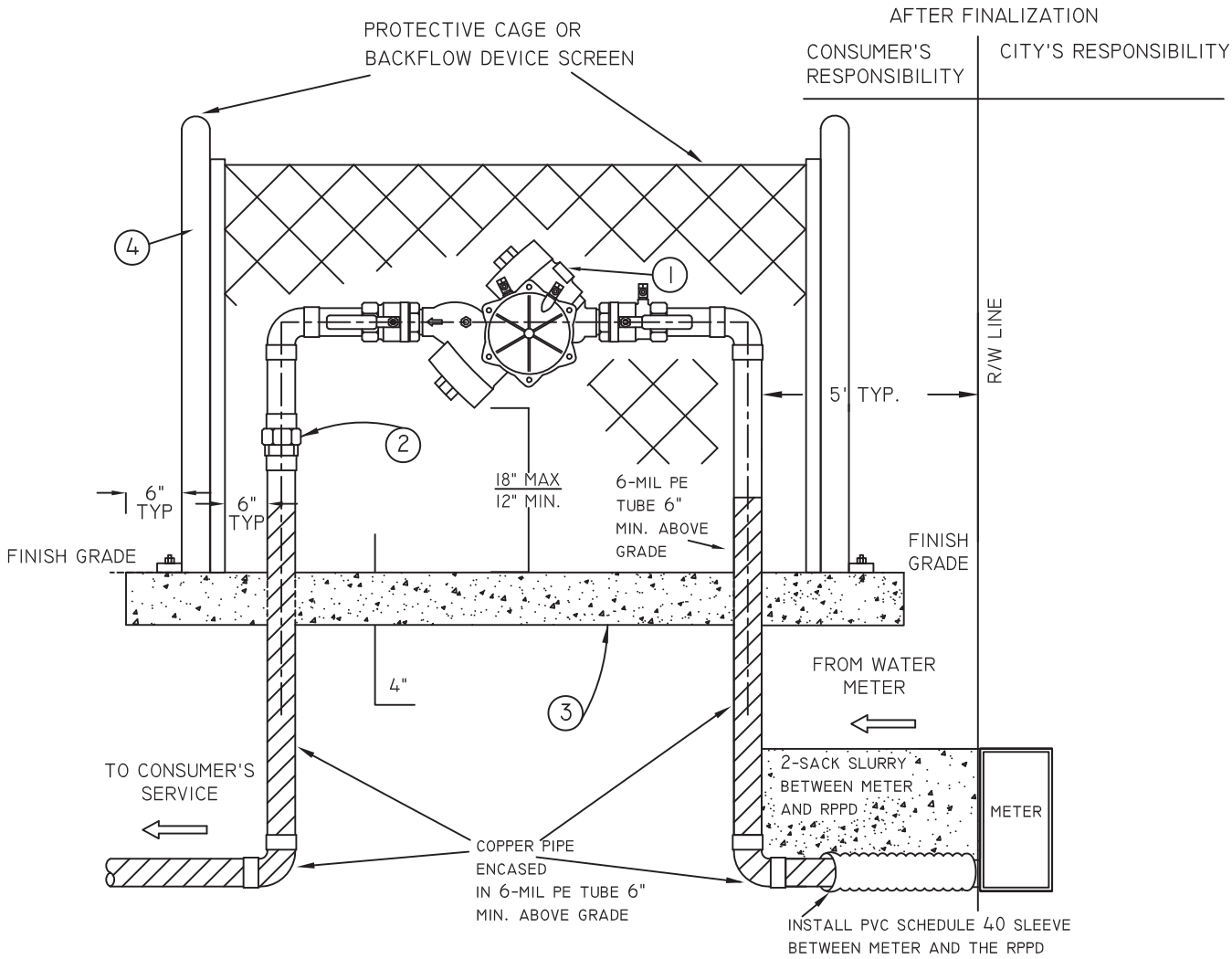

GENERAL NOTES

1. ALL RPPDs SHALL BE LOCATED ABOVE GROUND. RPPDs MAY BE SCREENED FROM VIEW BY EITHER LANDSCAPE OR ARCHITECTURAL FEATURES, AND INSTALLED AS CLOSE AS PRACTICAL TO THE WATER METER AND SHALL BE INSTALLED IN A LOCATION THAT IS READILY ACCESSIBLE FOR TESTING AND MAINTENANCE.
2. IMMEDIATELY AFTER INSTALLATION, RELOCATION OR REPAIR, ALL RPPDs SHALL BE TESTED BY A CERTIFIED TESTER APPROVED BY THE CITY. NO SERVICE SHALL BE DEEMED ACCEPTABLE UNTIL THE DEVICE IS TESTED AND CERTIFIED AFTER INSTALLATION.
3. RISERS AND TUBING SHALL BE TYPE "K" RIGID COPPER PIPE ENCASED IN 6-MIL POLYETHYLENE AND ALL FITTINGS SHALL BE SOLDER-JOINT TYPE PER UNIFORM PLUMBING CODE AS ADOPTED BY THE CITY OF HUNTINGTON BEACH. ALL UNDERGROUND TUBING FROM THE METER TO THE RPPD SHALL BE SLEEVED IN SCHEDULE 40 PVC AND BACKFILLED WITH TWO SACK SLURRY TO 12" (MIN.) OVER PIPE. COPPER SERVICE AND RPPD SHALL BE AT LEAST THE SAME SIZE AS THE METER.
4. TEES OR OTHER APPURTENANCES ARE PROHIBITED BETWEEN THE METER AND THE RPPD.
5. PAINT RPPD PER SPECIFICATION 02087.1.

ITEM	DESCRIPTION	SPECIFICATION	QTY
1	REDUCE PRESSURE PRINCIPLE BACKFLOW PREVENTION ASSEMBLY DEVICE PER THE CALIFORNIA DEPARTMENT OF HEALTH SERVICES APRROVED LIST OF DEVICES.	02087.1	1
2	SOLDER JOINT UNION PER CALIFORNIA PLUMBING CODE AS ADOPTED BY THE CITY.		A.R.
3	A CONCRETE PAD SHALL BE CONSTRUCTED IF ONE DOES NOT ALREADY EXIST.	03300	A.R.
4	RPPD ENCLOSURE (RECOMMENDED).	02087.1	1

APPROVED:

Tom Ward

CITY ENGINEER

DATE: 11/17/16

CITY OF HUNTINGTON BEACH

DEPARTMENT OF PUBLIC WORKS

1" THROUGH 2" REDUCED PRESSURE PRINCIPLE DEVICE (RPPD)
(FOR COMMERCIAL, INDUSTRIAL, AND MULTI FAMILY RESIDENTIAL)

STANDARD PLAN
609A

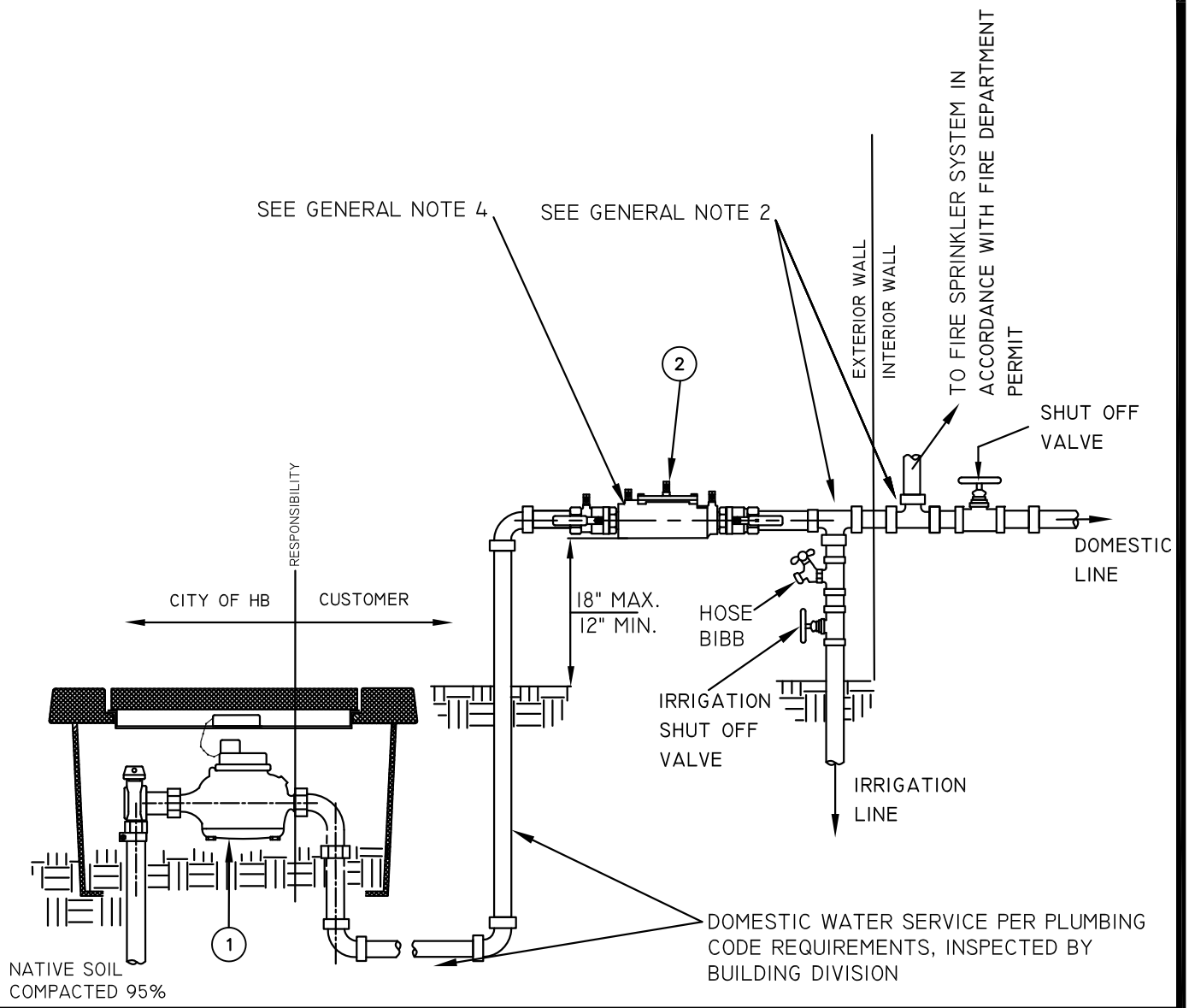

GENERAL NOTES

1. IMMEDIATELY AFTER INSTALLATION, ALL BACKFLOW DEVICES SHALL BE TESTED BY A CERTIFIED TESTER APPROVED BY THE CITY. NO SERVICE SHALL BE DEEMED ACCEPTABLE UNTIL THE DEVICE IS TESTED AND CERTIFIED AFTER INSTALLATION.
2. TEES OR OTHER APPURTENANCES ARE PROHIBITED BETWEEN THE METER AND THE BACKFLOW DEVICE AND SHALL BE CONSTRUCTED DOWNSTREAM OF THE BACKFLOW DEVICE.
3. DOUBLE CHECK VALVE BACKFLOW ASSEMBLY SHALL BE THE SAME SIZE DIAMETER AS THE WATER SERVICE.
4. THE BACKFLOW DEVICE IS A PART OF THE PUBLIC WORKS ENCROACHMENT PERMIT AND THE PW INSPECTOR AND CROSS-CONNECTION CONTROL SPECIALIST WILL BE RESPONSIBLE FOR INSPECTING AND APPROVING THE FINAL LOCATION OF THE DCV.
5. SEE PLANNING DIVISION FOR THERMAL EXPANSION REQUIREMENTS PER STANDARD PLAN 609 PAGE 2 NOTE E.

ITEM	DESCRIPTION	PLAN OR SPECIFICATION	QTY
1	RESIDENTIAL METER; 1" THROUGH 2".	STD 601–603	--
2	DOUBLE CHECK VALVE BACKFLOW PREVENTION ASSEMBLY (LEAD FREE)	02087.1	--

APPROVED:

CITY ENGINEER

DATE: 3/1/19

CITY OF HUNTINGTON BEACH

DEPARTMENT OF PUBLIC WORKS

RESIDENTIAL FIRE AND DOMESTIC DOUBLE CHECK VALVE BACKFLOW ASSEMBLY (DCV) (FOR NEW RESIDENTIAL FIRE SPRINKLER SYSTEMS)

STANDARD PLAN

609B

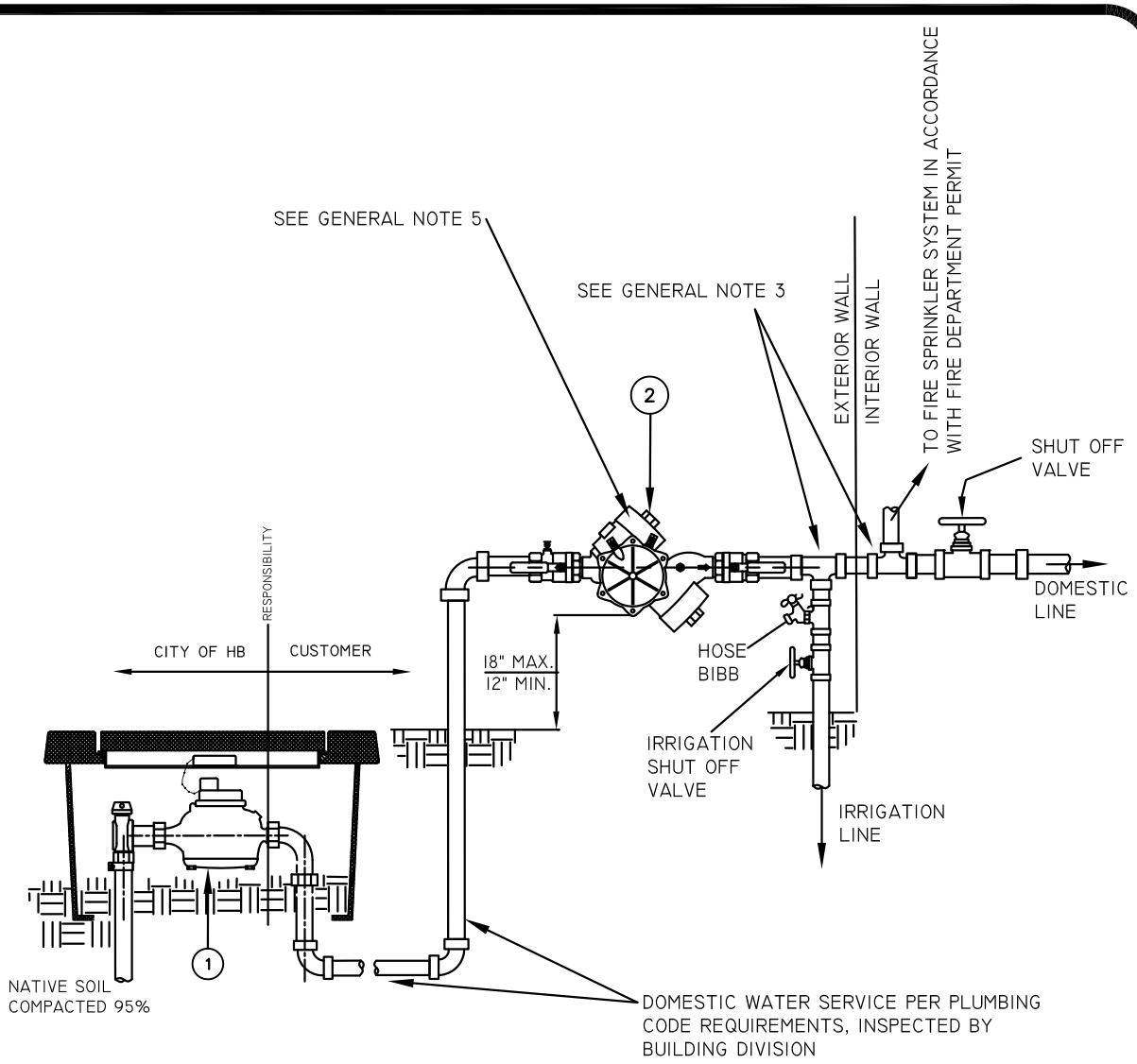

GENERAL NOTES

1. FOR RESIDENTIAL WATERFRONT PROPERTIES ONLY
2. IMMEDIATELY AFTER INSTALLATION, ALL RPPDs SHALL BE TESTED BY A CERTIFIED TESTER APPROVED BY THE CITY. NO SERVICE SHALL BE DEEMED ACCEPTABLE UNTIL THE DEVICE IS TESTED AND CERTIFIED AFTER INSTALLATION.
3. TEES OR OTHER APPURTENANCES ARE PROHIBITED BETWEEN THE METER AND THE RPPD BACKFLOW DEVICE AND SHALL BE CONSTRUCTED DOWNSTREAM OF THE RPPD BACKFLOW DEVICE.
4. RPPD BACKFLOW ASSEMBLY SHALL BE THE SAME SIZE DIAMETER AS THE WATER SERVICE.
5. THE BACKFLOW DEVICE IS A PART OF THE PUBLIC WORKS ENCROACHMENT PERMIT AND THE PW INSPECTOR AND CROSS-CONNECTION CONTROL SPECIALIST WILL BE RESPONSIBLE FOR INSPECTING AND APPROVING THE FINAL LOCATION OF THE DCV.
6. SEE PLANNING DIVISION FOR THERMAL EXPANSION REQUIREMENTS PER STANDARD PLAN 609 PAGE 2 NOTE E.

ITEM	DESCRIPTION	PLAN OR SPECIFICATION	QTY
1	RESIDENTIAL METER; 1" THROUGH 2".	STD 601–603	--
2	REDUCED PRESSURE PRINCIPLE BACKFLOW PREVENTION ASSEMBLY RPPD (LEAD FREE)	02087.1	--

APPROVED:

CITY ENGINEER

DATE: 3/1/19

CITY OF HUNTINGTON BEACH

DEPARTMENT OF PUBLIC WORKS

RESIDENTIAL FIRE AND DOMESTIC REDUCED PRESSURE PRINCIPLE DEVICE (RPPD) BACKFLOW ASSEMBLY FOR WATERFRONT PROPERTIES ONLY (FOR NEW RESIDENTIAL FIRE SPRINKLER SYSTEMS)

STANDARD PLAN

609C

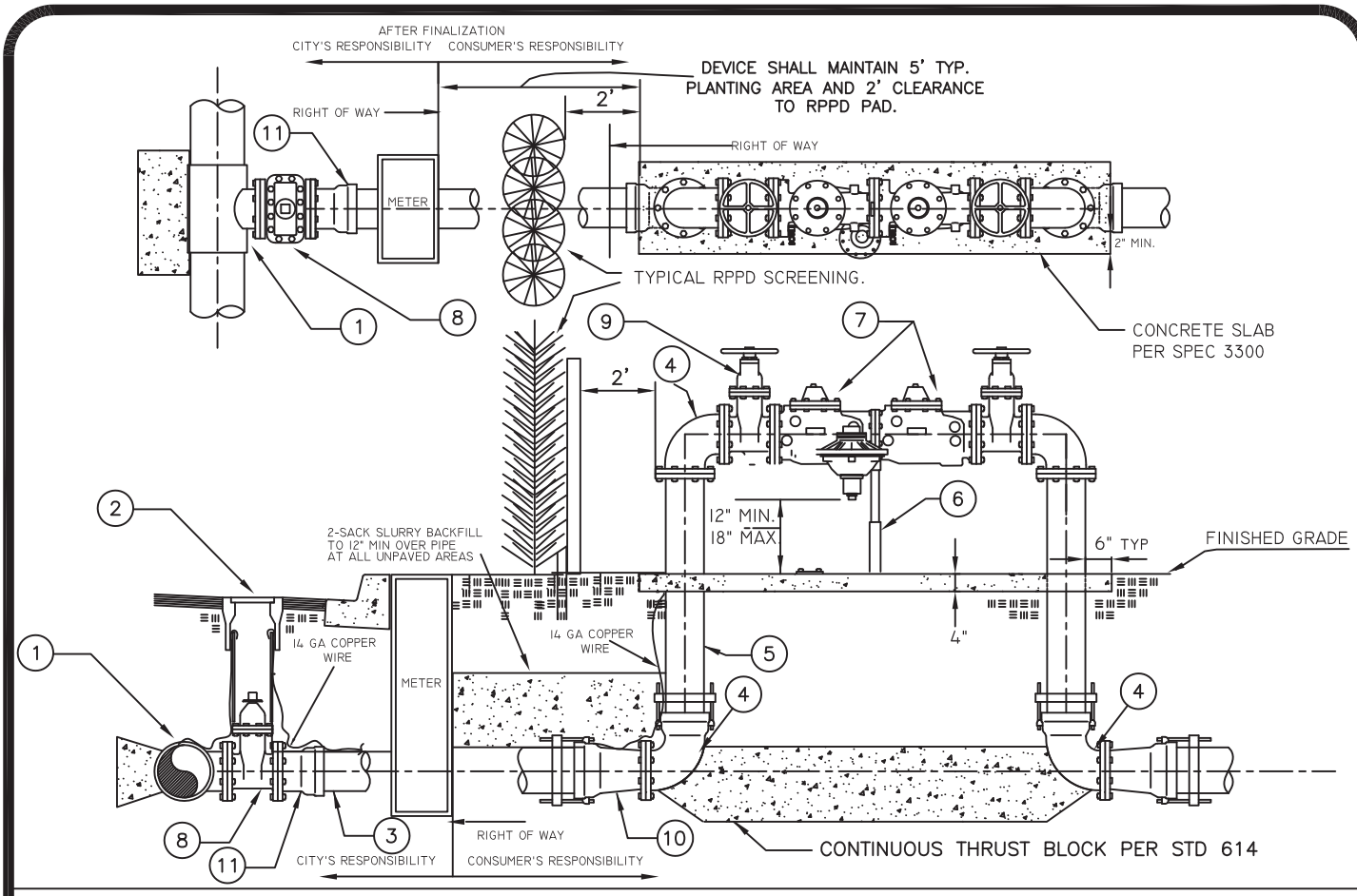

GENERAL NOTES:

1. ALL DUCTILE IRON SPOOLS SHALL BE ONE PIECE, CLASS 53, FLANGED, AND SHALL BE INSTALLED PER THE CITY OF HUNTINGTON BEACH STANDARD PLANS AND SPECIFICATIONS.
2. ALL FASTENERS SHALL BE TYPE 316 STAINLESS STEEL.
3. PIPE SUPPORT(S) ARE REQUIRED PER STANDARD PLAN 616.
4. ALL ABOVE GROUND PIPING, INCLUDING BACKFLOW DEVICE, SHALL BE PAINTED ACCORDING TO SPEC. 02087.1.
5. CONTRACTOR MUST POSSESS AN A OR C34 CONTRACTORS LICENSE TO PERFORM THE FIRE SERVICE CONSTRUCTION.
6. ALL FITTINGS SHALL BE DUCTILE IRON.
7. ALL FITTINGS SHALL BE INSTALLED PER STANDARD PLAN 614.
8. IMMEDIATELY AFTER INSTALLATION, RELOCATION, OR REPAIR, ALL BACKFLOW PREVENTION DEVICES SHALL BE TESTED BY A CERTIFIED TESTER APPROVED BY THE CITY OF HUNTINGTON BEACH. NO SERVICE SHALL BE DEEMED ACCEPTABLE UNTIL THE DEVICE IS TESTED AND CERTIFIED AFTER INSTALLATION.
9. TEE OR OTHER APPURTENANCES ARE PROHIBITED BETWEEN THE METER AND THE RPPD.

ITEM	DESCRIPTION	SPECIFICATION	QTY
1	TEE OR TAPPING TEE, FLG, PER STD PLAN No.619. 4" MIN. OR RPPD SIZE, WHICH EVER GREATER.	02085.9	1
2	VALVE BOX PER STD PLAN No. 612.	02085.9	1
3	P.V.C. PIPE AWWA C900, DR18. (4" MIN.)	02510.9	AR
4	90° ELBOW, FLANGED ABOVE GROUND, FLG OR MJ RESTRAINED BELOW GROUND.	02510.1	4
5	D.I. PIPE, TC 53, FLG X MJ, W/POLYETHYLENE ENCASEMENT. LENGTH AS REQUIRED.	02510.1	1
6	ADJUSTABLE PIPE SUPPORT PER STD. PLAN No. 616.	02510.8	1
7	REDUCED PRESSURE PRINCIPLE ASSY. PER STATE DIVISION OF DRINKING WATER APPROVED LIST.	02087.1	1
8	GATE VALVE PER STD. PLAN No. 619 (4" MIN.)	02085.9	1
9	RESILIENT WEDGE VALVE, FLANGED, W/HAND WHEEL	02085.9	1
10	REDUCER IF REQUIRED FLG OR MJ RESTRAINED.	02510.1	1
11	FLG X MJ ADAPTER.	02510.1	1

APPROVED:

Tom Ott

CITY ENGINEER

DATE: 11/17/16

CITY OF HUNTINGTON BEACH

DEPARTMENT OF PUBLIC WORKS

3" THROUGH 10"
REDUCED PRESSURE PRINCIPLE DEVICE
(RPPD)

STANDARD PLAN
609D

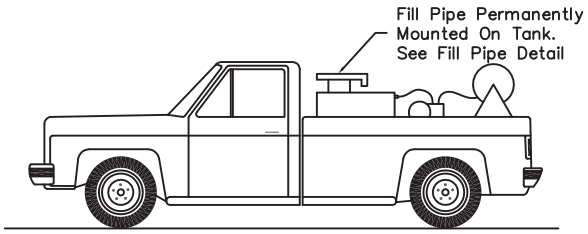

PESTICIDE APPLICATOR TRUCK

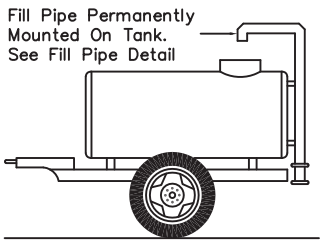

WATER WAGON

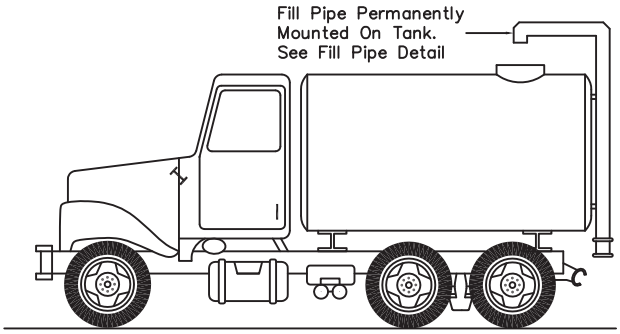

WATER TRUCK

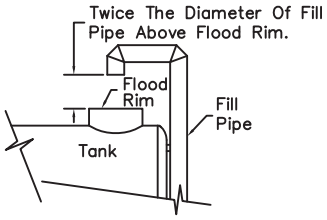

FILL PIPE DETAIL

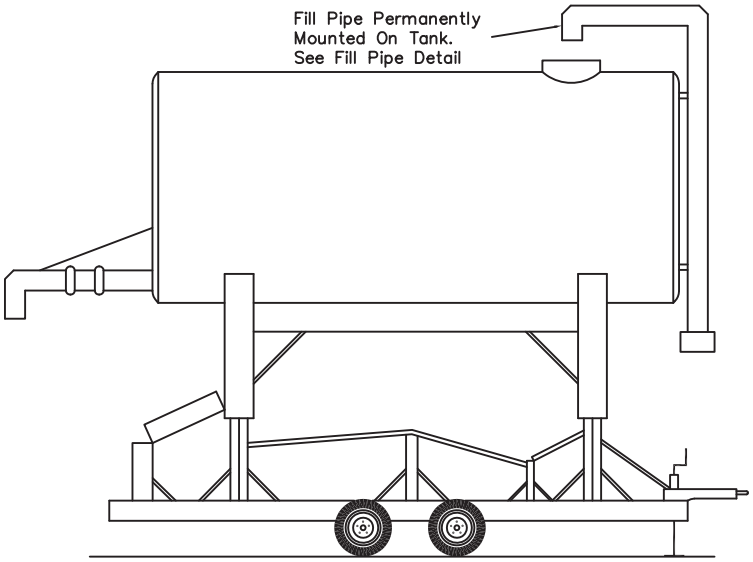

ELEVATED TANK

ANY OTHER SPECIALIZED AIR GAP DESIGNS AND INSTALLATIONS MUST BE APPROVED BY CITY UTILITY CROSS CONNECTION CONTROL SPECIALIST PRIOR TO USE.

CUSTOMIZED AIR GAP

APPROVED:

CITY ENGINEER

DATE: 11/17/16

CITY OF HUNTINGTON BEACH

DEPARTMENT OF PUBLIC WORKS

AIR GAP BACKFLOW ASSEMBLY

STANDARD PLAN

609E

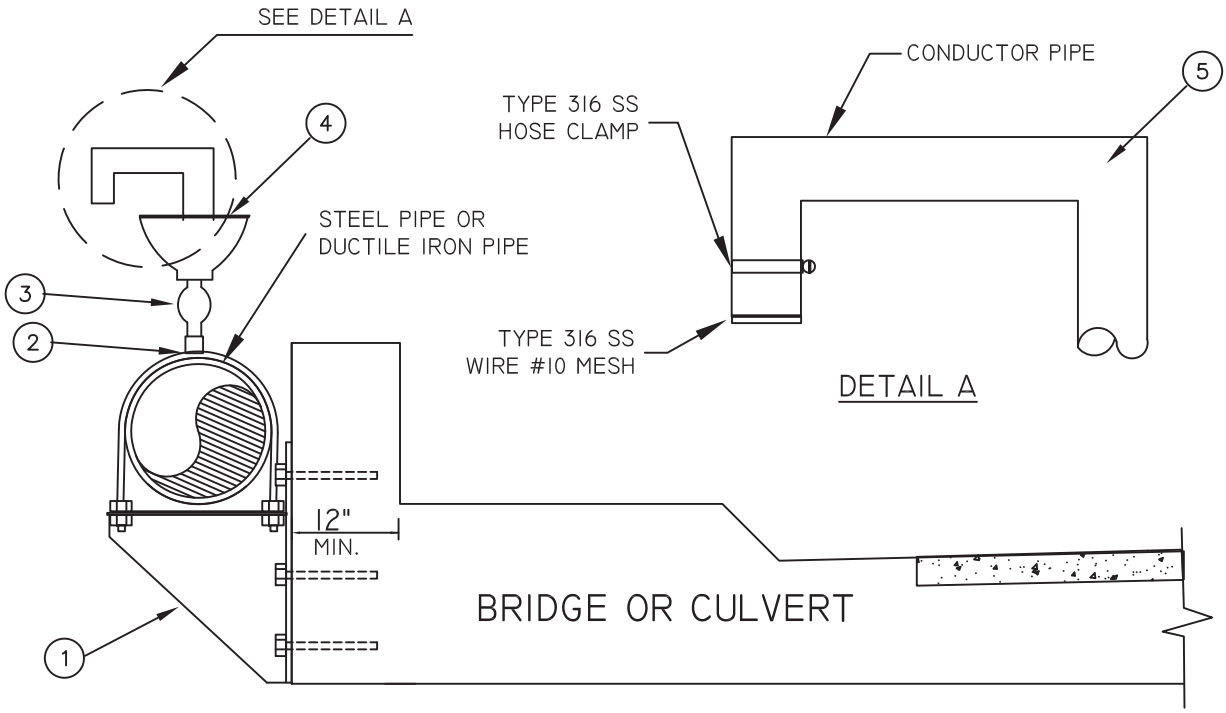

GENERAL NOTES

1.) THIS TYPE OF BRIDGE CROSSING IS TO BE USED WHERE NO UTILITY SUPPORTS ARE PROVIDED INTO EXISTING BRIDGE. USE ITEMS 2, 3, 4, & 5, ONLY FOR BRIDGES WITH UTILITY SUPPORTS. 2.) DI OR STEEL PIPE SHALL BE COATED IN ACCORDANCE WITH CITY STANDARD SPECIFICATIONS 3.) ALL NUTS, BOLTS, AND WASHERS SHALL BE 316 STAINLESS STEEL. 4.) STEEL PIPE SHALL CONFORM TO THE A.W.W.A MII MANUAL. 5.) AR = AS REQUIRED.

ITEM	DESCRIPTION	SPECIFICATION	QTY
1	PIPE SUPPORT BRACKET REFER TO SHEET 2 OF THIS PLAN		AR
2	FOR STEEL PIPE USE 2½" STEEL COUPLINGS WELDED TO PIPE. FOR DIP USE TAPPING SADDLE AND CORP. STOP FROM SPEC. SECTION 02510.8. INSTALL WITH INSULATING BUSHING.	02510.2	1
3	2" IP x IP CORP. STOP (TYPICAL).	02510.8	1
4	AIR VACUUM RELEASE VALVE, OR MUSHROOM CAP.	02085.3	1
5	GALVANIZED STREET ELBOWS	02510.8	2

APPROVED:

CITY ENGINEER

DATE: 9/1/13

CITY OF HUNTINGTON BEACH

DEPARTMENT OF PUBLIC WORKS

BRIDGE AND CULVERT CROSSING

STANDARD PLAN

610

1 OF 2

NOTES:

1. MAXIMUM SPACING BETWEEN BRACKETS SHALL BE 10'–0" CENTER TO CENTER FOR ¼" BACK PLATE. (MAXIMUM SPACING BETWEEN BRACKETS SHALL BE 20'–0" CENTER TO CENTER, FOR ½" BACK PLATE)
2. STEEL PLATES SHALL BE ASTM A–36 AND COATINGS SHALL BE PER SPECIFICATION SECTION 09970.
3. ALL CONNECTIONS SHALL BE ¼" FILLET WELD ALL AROUND.
4. BOLT HOLES SHALL BE ⅞" DIAMETER.
5. EXISTING CONCRETE WALL SHALL BE 12" THICK MINIMUM.
6. CONTRACTOR SHALL NOT DAMAGE ANY EXISTING REBARS IN THE EXISTING CONCRETE WALL AND SHALL LOCATE EXISTING REBARS BEFORE DRILLING.
7. DESIGN OF THIS BRACKET IS BASED ON THE 2007 CALIFORNIA BUILDING CODE.
8. SPECIAL INSPECTION SHALL BE PROVIDED FOR ANCHOR INSTALLATION.
9. FIBER REINFORCED PLASTIC (FRP) NON–CORROSIVE, NON–CONDUCTIVE 180° PIPE SADDLES, SHALL BE INSTALLED TO ISOLATE PIPE FROM PIPE SUPPORT.

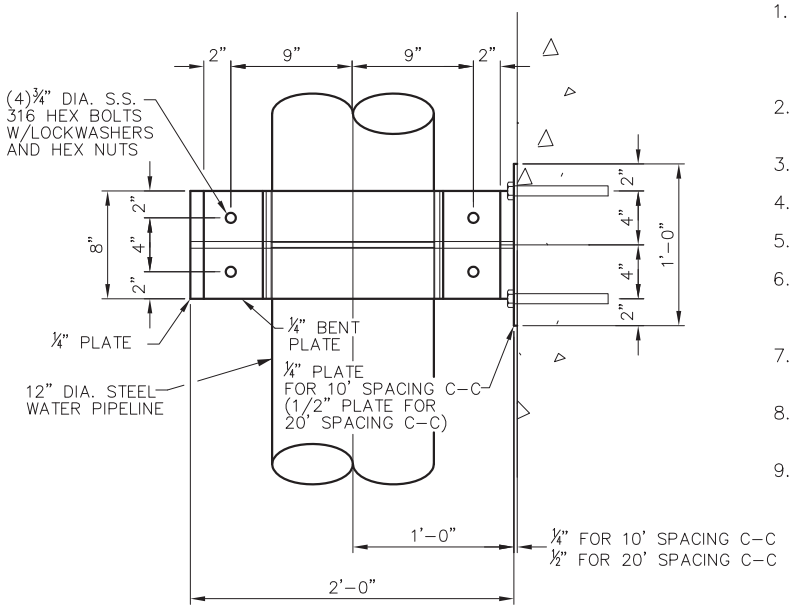

PLAN

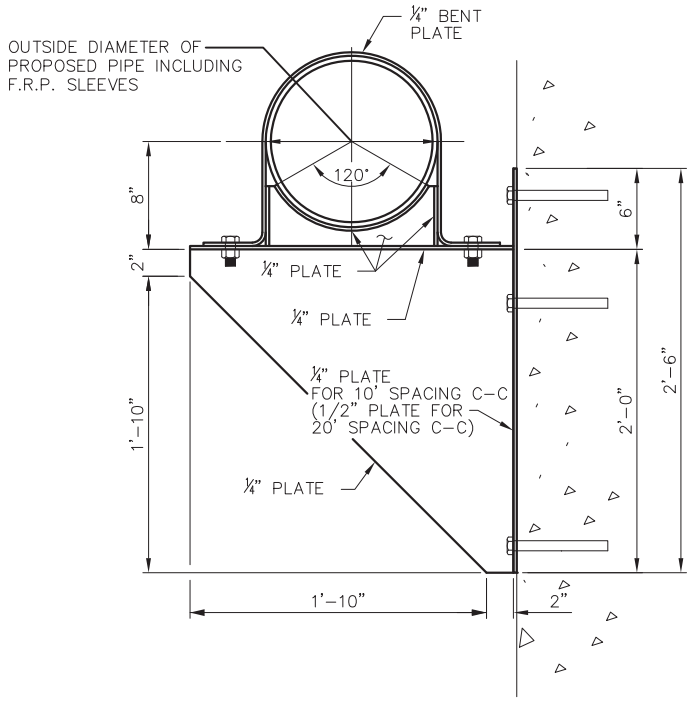

SIDE ELEVATION

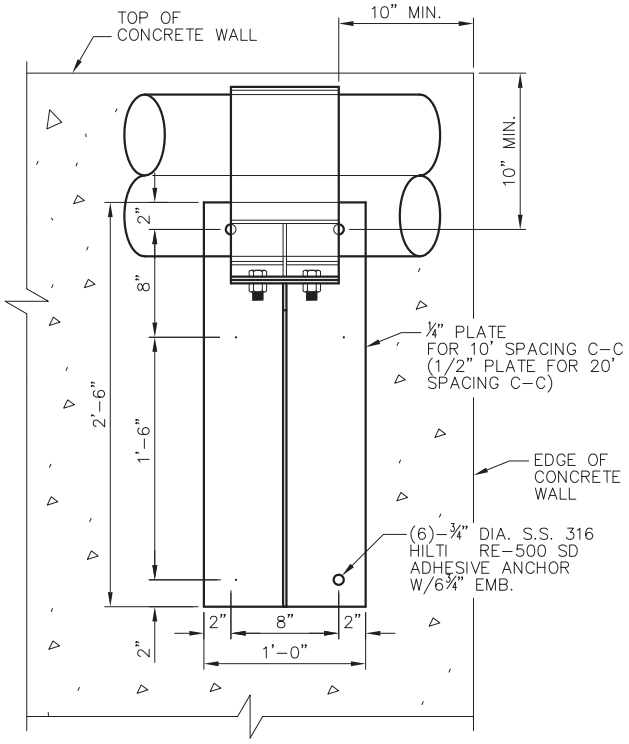

FRONT ELEVATION

APPROVED:

CITY ENGINEER

DATE: 9/1/13

CITY OF HUNTINGTON BEACH

DEPARTMENT OF PUBLIC WORKS

PIPE SUPPORT BRACKET FOR 8"–12" WATER PIPELINE

STANDARD PLAN
610
2 OF 2

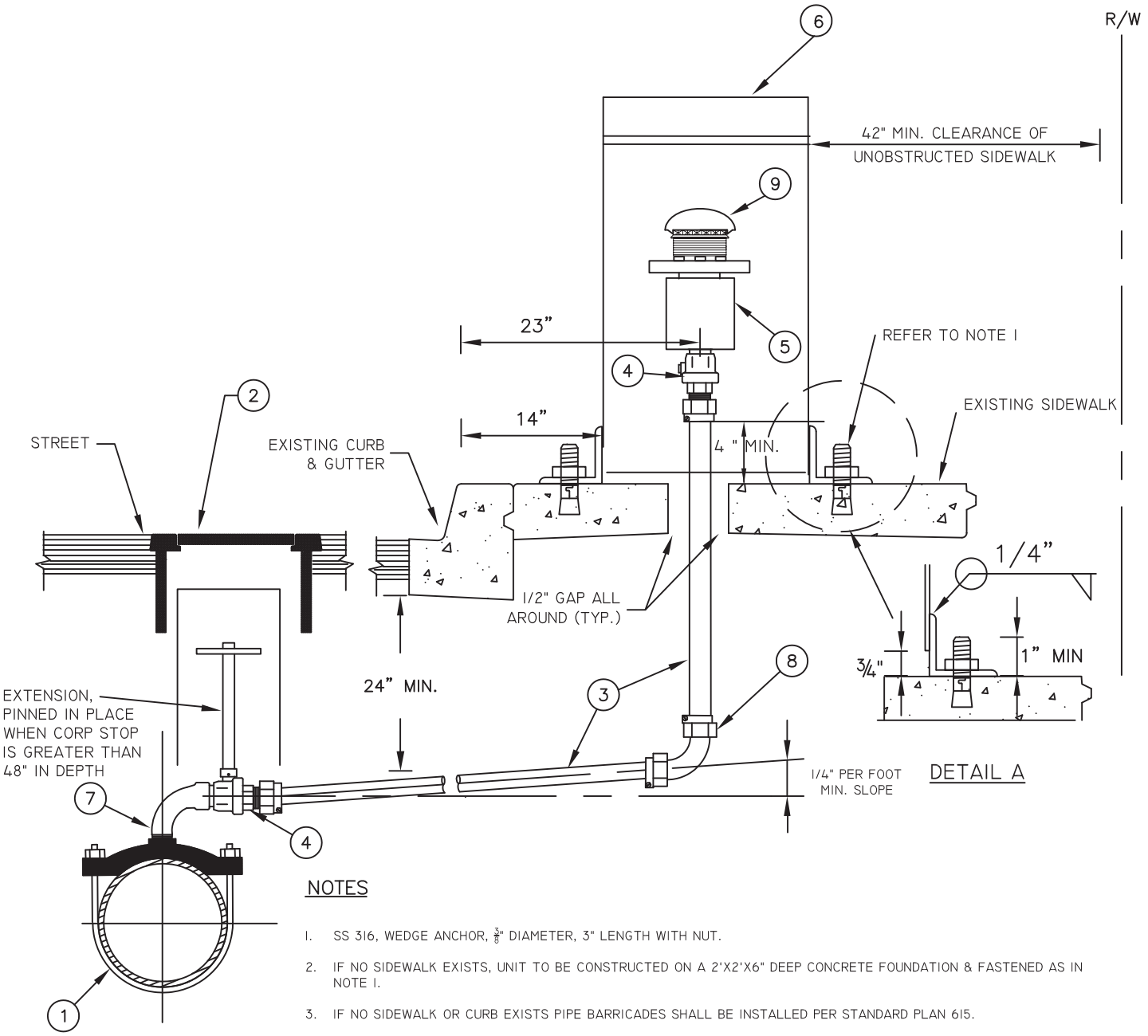

NOTES

1. SS 316, WEDGE ANCHOR, $\frac{3}{8}$" DIAMETER, 3" LENGTH WITH NUT.
2. IF NO SIDEWALK EXISTS, UNIT TO BE CONSTRUCTED ON A 2'X2'X6" DEEP CONCRETE FOUNDATION & FASTENED AS IN NOTE 1.
3. IF NO SIDEWALK OR CURB EXISTS PIPE BARRICADES SHALL BE INSTALLED PER STANDARD PLAN 615.

ITEM	DESCRIPTION	SPECIFICATION	QTY	ITEM	DESCRIPTION	SPECIFICATION	QTY
1	SERVICE SADDLE – 2"	02510.8	1	5	AIR VACUUM RELEASE VALVE – 2"	02085.3	1
2	VALVE BOX ASSEMBLY PER STANDARD PLAN 612		1	6	ORNAMENTAL UNIT	02085.3	1
3	2" TYPE K COPPER PIPE WRAPPED IN 8 MIL P.E.	02510.8	AR	7	BRASS 90° ST. ELBOW, (I.P.) –2"	02510.8	1
				8	90° ELL, PACK–JOINT – 2"	02510.8	1
4	CORP. STOP, PACK–JOINT – 2".	02510.8	2	9	MUSHROOM CAP	02085.3	1

APPROVED:

CITY ENGINEER

DATE: 12/01/16

CITY OF HUNTINGTON BEACH

DEPARTMENT OF PUBLIC WORKS

2–INCH AIR & VACUUM
RELEASE VALVE ASSEMBLY

STANDARD PLAN
611

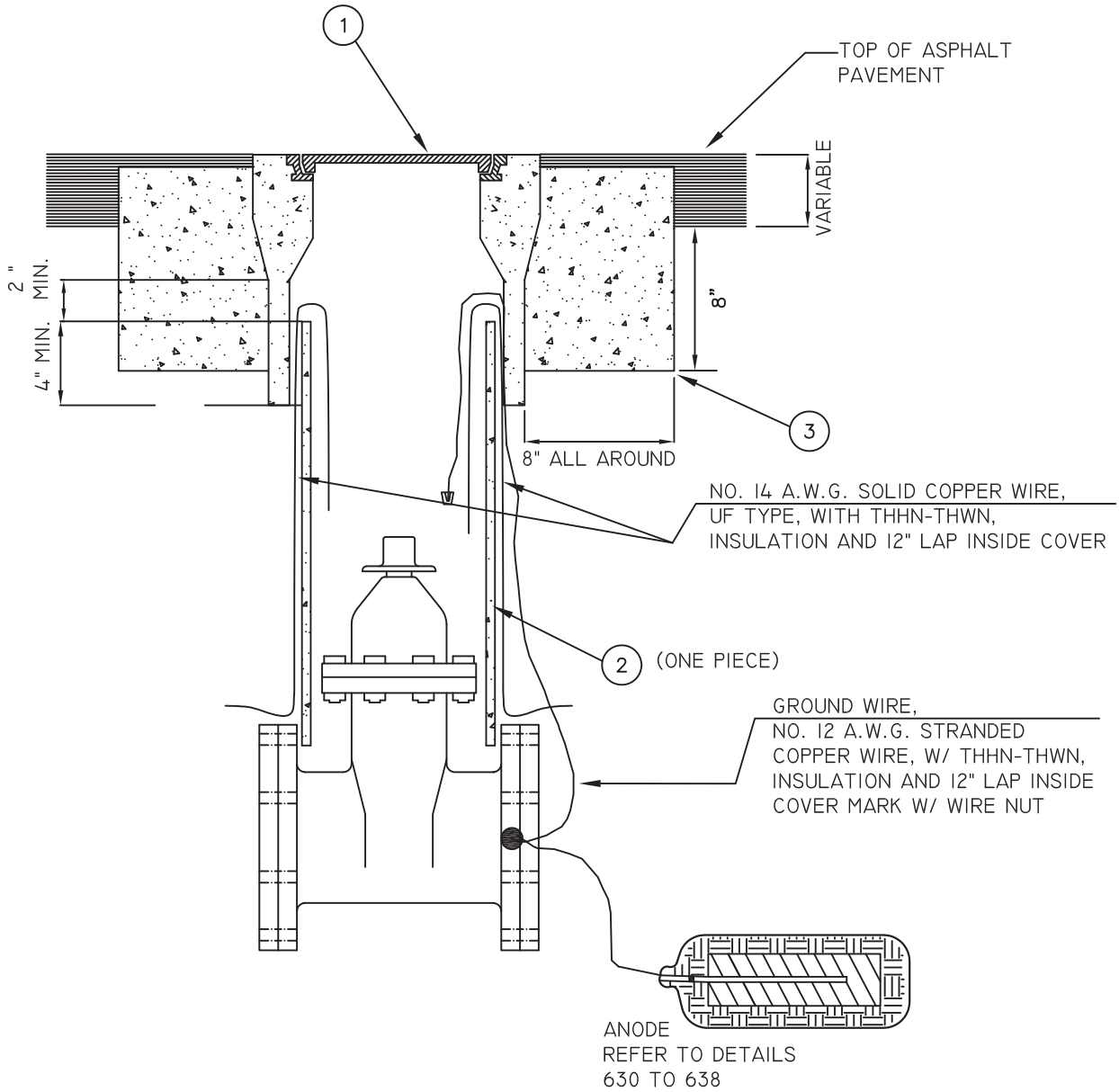

GENERAL NOTES

1.) TOP OF VALVE BOX SHALL BE FLUSH WITH TOP OF PAVEMENT WITH A MINUS 1/4" MAX TOLERANCE.
2.) RADIO LOCATION TAPE OR COPPER WIRE SHALL BE SECURELY TAPED TO THE INSIDE OF THE VALVE BOX.

ITEM	DESCRIPTION	SPECIFICATION	QTY
1	VALVE BOX COVER, MARKED "WATER"	02085.9	1
2	8" P.V.C. SDR 35 OR GREATER WALL THICKNESS PVC	02530.9	AR
3	CONCRETE COLLAR	03300	1

APPROVED:

CITY ENGINEER

DATE: 11/17/16

CITY OF HUNTINGTON BEACH

DEPARTMENT OF PUBLIC WORKS

VALVE BOX ASSEMBLY

STANDARD PLAN

612

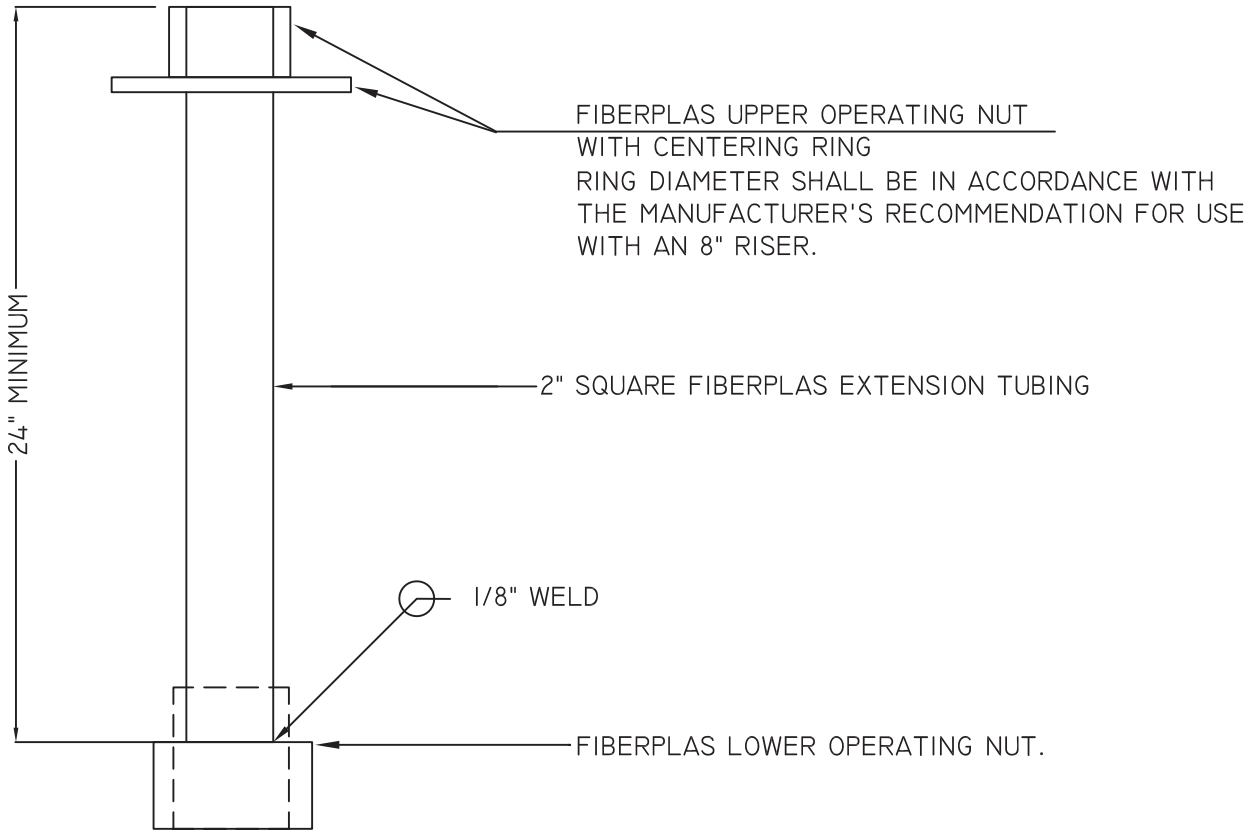

GENERAL NOTES

1. PROVIDE VALVE STEM EXTENSIONS WHEN DEPTH TO OPERATING NUT EXCEEDS 48" (FABRICATE EXTENSION TO FIELD MEASUREMENT - SEE NOTE 2).
2. NO VALVE STEM EXTENSION SHALL BE LESS THAN 2 FEET IN LENGTH. TERMINATE EXTENSION 24" TO 36" FROM FINISHED GRADE.
3. VALVE STEM EXTENSION SHALL BE FIBERPLAS BY PIPELINE PRODUCTS, SAN MARCOS, CA OR APPROVED EQUAL.

APPROVED:

CITY ENGINEER

DATE: 9/1/13

CITY OF HUNTINGTON BEACH

DEPARTMENT OF PUBLIC WORKS

VALVE STEM EXTENSION

STANDARD PLAN

612A

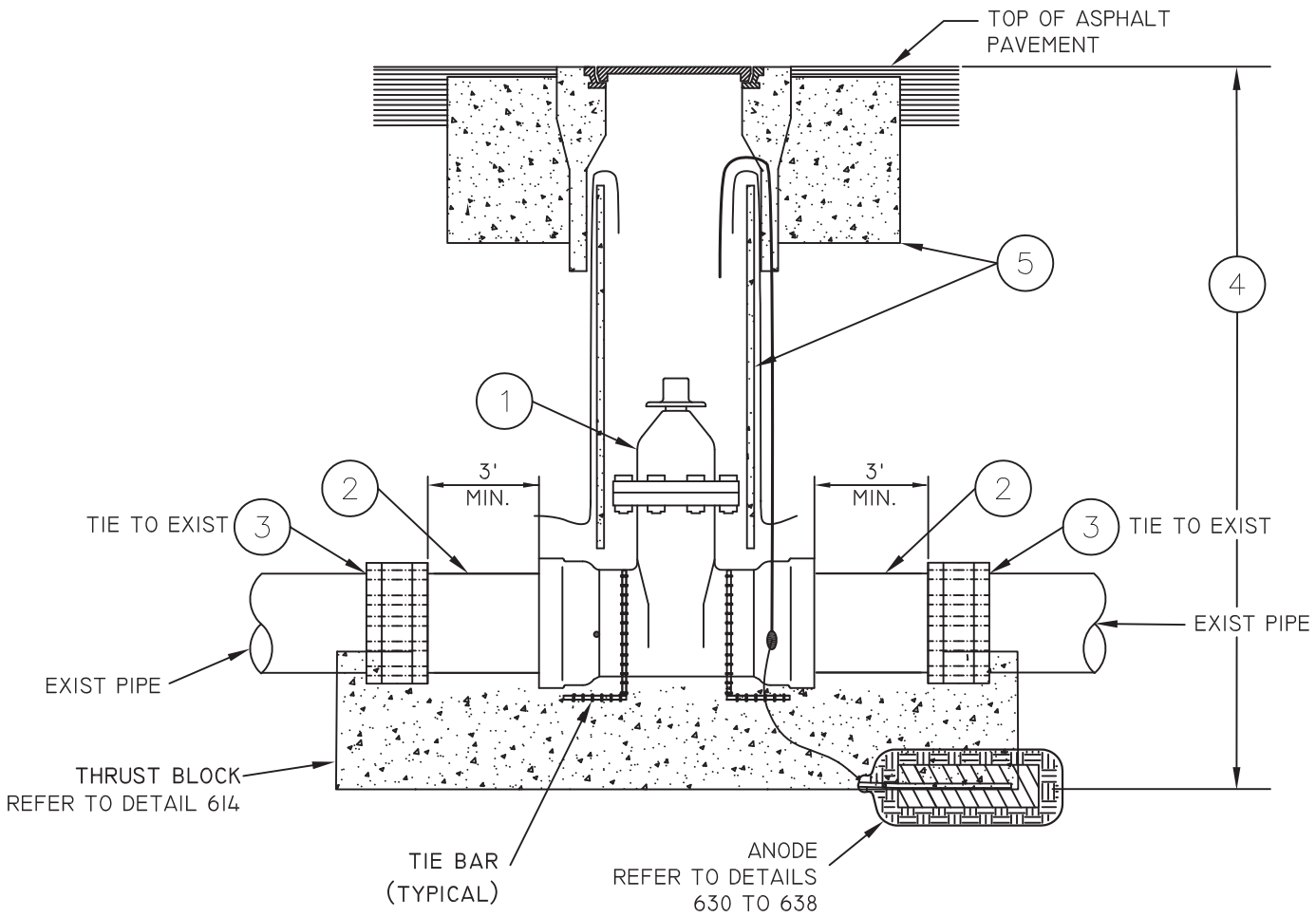

GENERAL NOTES

1.) PROTECT IN PLACE EXISTING UTILITIES. 2.) REMOVE AND LEGALLY DISPOSE OF AC PIPE.
3.) DO NOT CUT OR MILL EXISTING AC PIPE. SNAP CUTTERS MAY BE USED, OR REMOVE A.C. PIPE TO NEAREST COUPLING.

ITEM	DESCRIPTION	SPECIFICATION	QTY
1	CUT-IN PUSH-ON OR MECHANICAL JOINT VALVE, NOMINAL SIZE SHOULD BE THE SAME AS THE EXISTING MAIN.	02085.9	AR
2	P.V.C. PIPE, DR14.	02510.9	AR
3	TRANSITION COUPLING.	02088	2
4	EXCAVATION, BACKFILL AND COMPACTING FOR STRUCTURE, REFER TO DETAIL 606.		AR
5	VALVE BOX ASSEMBLY, REFER TO DETAIL 612, AND VALVE STEM EXTENSION, REFER TO DETAIL 612A.		AR

APPROVED:

Tom Ward

CITY ENGINEER

DATE: 11/17/16

CITY OF HUNTINGTON BEACH

DEPARTMENT OF PUBLIC WORKS

6", 8" OR 12"
CUT-IN VALVE

STANDARD PLAN
612B

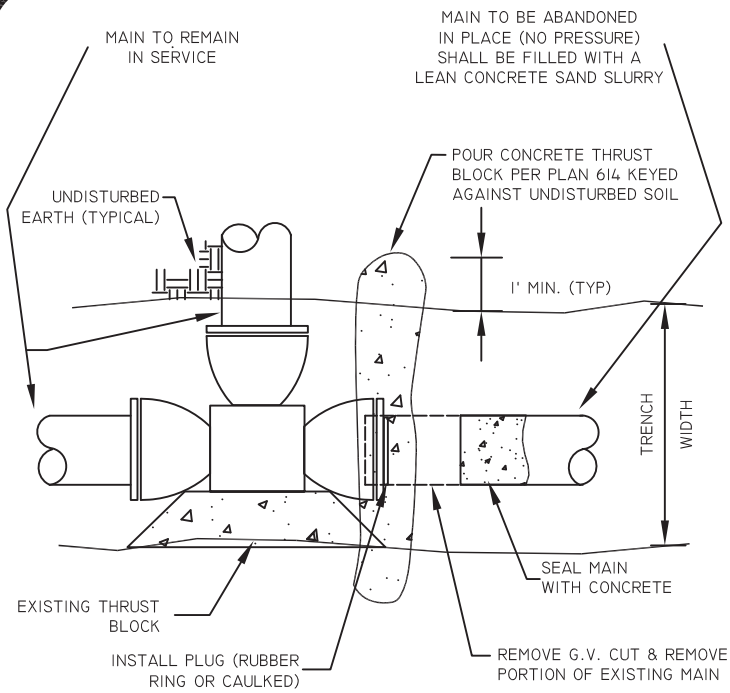

PLAN

EXISTING HUB END FITTING OR VALVE

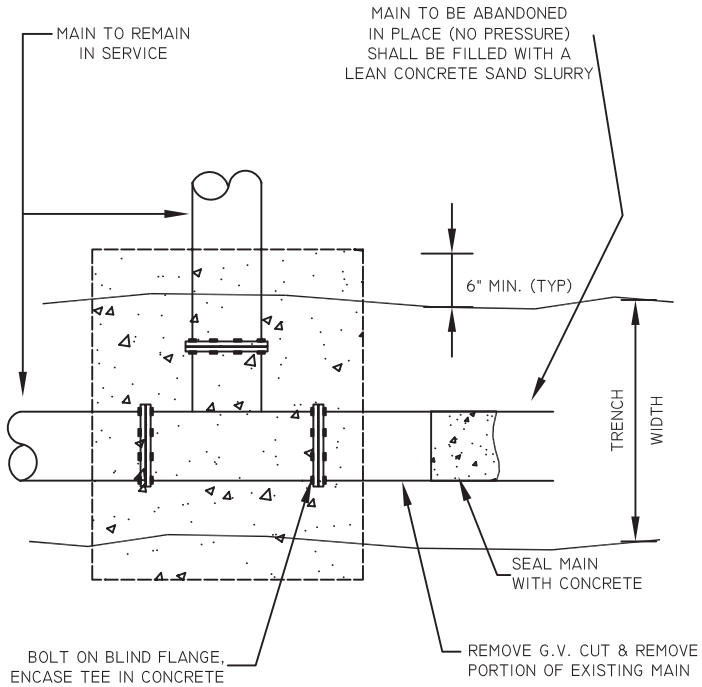

PLAN

EXISTING FLANGED FITTING OR VALVE

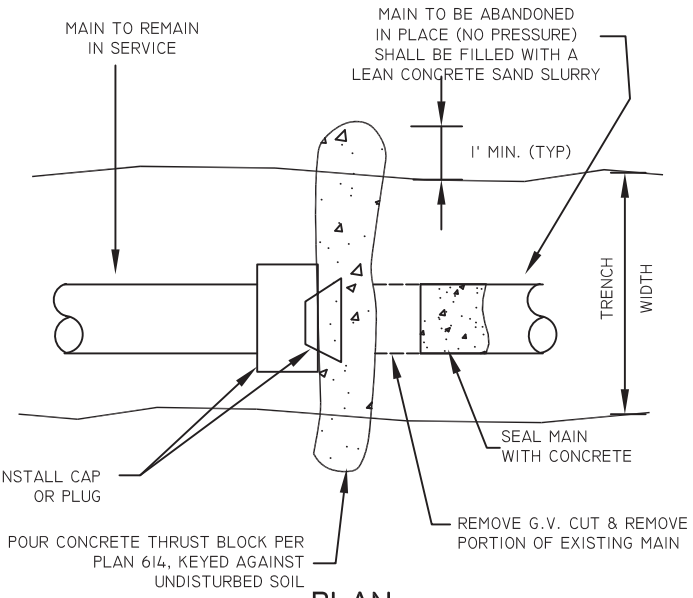

PLAN

EXISTING ASBESTOS-CEMENT, POLYVINYL CHLORIDE, OR CAST-IRON MAIN

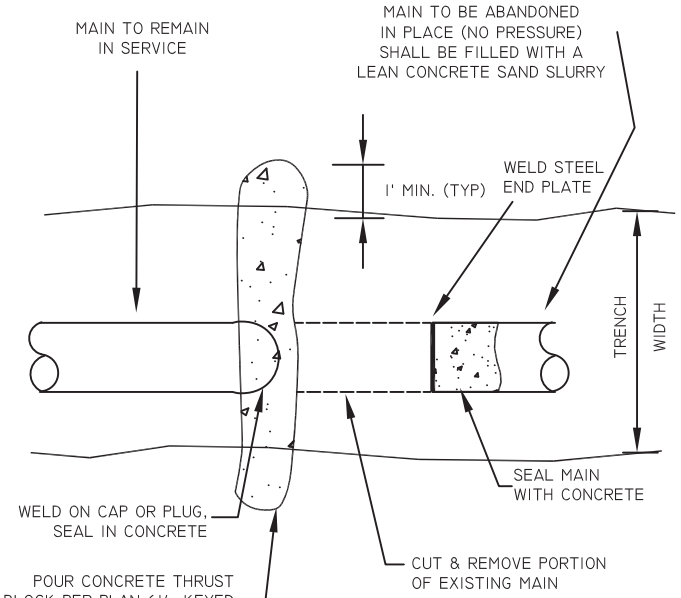

PLAN

EXISTING STEEL MAIN

GENERAL NOTES

1. REFER TO STANDARD PLAN NO. 614 FOR BEARING AREAS ON THRUST BLOCKS.
2. REFER TO SPECIFICATION 03300 FOR CONCRETE REQUIREMENTS.
3. REFER TO SPECIFICATION 02224 FOR ABANDONMENT OF UTILITIES.
4. TO ABANDON AN EXISTING SERVICE ON A MAIN THAT WILL REMAIN IN SERVICE, DE-PRESSURIZE MAIN, REMOVE SADDLE AND CORP-STOP, CLEAN MAIN AND INSTALL FULL CIRCLE REPAIR CLAMP WITH GREASE AND WRAP. A BRONZE PLUG MAY BE USED IN THE EXISTING BRONZE SADDLE IN LIEU OF A FULL CIRCLE REPAIR CLAMP, PROVIDED THE BRONZE SADDLE IS IN NEAR NEW CONDITION AS DETERMINED BY THE CITY WATER INSPECTOR.

APPROVED:

CITY ENGINEER

DATE: 9/1/13

CITY OF HUNTINGTON BEACH

DEPARTMENT OF PUBLIC WORKS

METHODS FOR CUTTING AND PLUGGING EXISTING WATER MAIN

STANDARD PLAN

613

NOTES

1. REPLACEMENT PIPE MATERIAL SHALL BE PVC PER SPECIFICATION 02510.
2. FLEXIBLE COUPLING SHALL BE SPECIFICALLY DESIGNED FOR USE ON THE PIPE SIZE AND MATERIAL(S) BEING CONNECTED, PER SECTION 02088. WHERE POSSIBLE, ONE END OF THE REPLACEMENT PIPE SECTION SHALL CONNECT TO AN EXISTING BELL OR SPIGOT.
3. USE OF FULL CIRCLE REPAIR CLAMPS IS PROHIBITED PER SPECIFICATION SECTION 02088.
4. IF NEW REPLACEMENT PIPE REQUIRES DRY BLOCKING, THEN USE SOLID MASONRY CONCRETE BLOCKS PER ASTM C-139.
5. BACKFILLING SHALL NOT BEGIN UNTIL LINE PRESSURE IS RESTORED AND CONNECTIONS ARE INSPECTED FOR LEAKAGE BY PUBLIC WORKS INSPECTOR PER SPECIFICATION 02517.
6. REPLACEMENT PIPE SHALL BE CLEANED IN ACCORDANCE WITH SPECIFICATION SECTION 02516.
7. IF THE EXISTING PIPE IS CI/DI OR AC, THEN USE TRANSITION COUPLINGS ON BOTH ENDS OF PIPE PER SPECIFICATION 02088.
8. ABANDONED PIPES SHALL BE PLUGGED PER STANDARD PLAN 613.
9. REFER TO STANDARD 606 FOR BACKFILLING TRENCH.
10. REFER TO SPECIFICATION 02515.1 AND 02224 FOR OTHER REQUIREMENTS.
11. ALL HARDWARE SHALL BE STAINLESS STEEL 316.
12. APPLY NO-OX-ID "A SPECIAL WW" GREASE AND WRAP TO ALL BURIED HARDWARE AND METALLIC FITTINGS. ALSO, COVER WITH POLYETHYLENE ENCASEMENT PER AWWA C105.

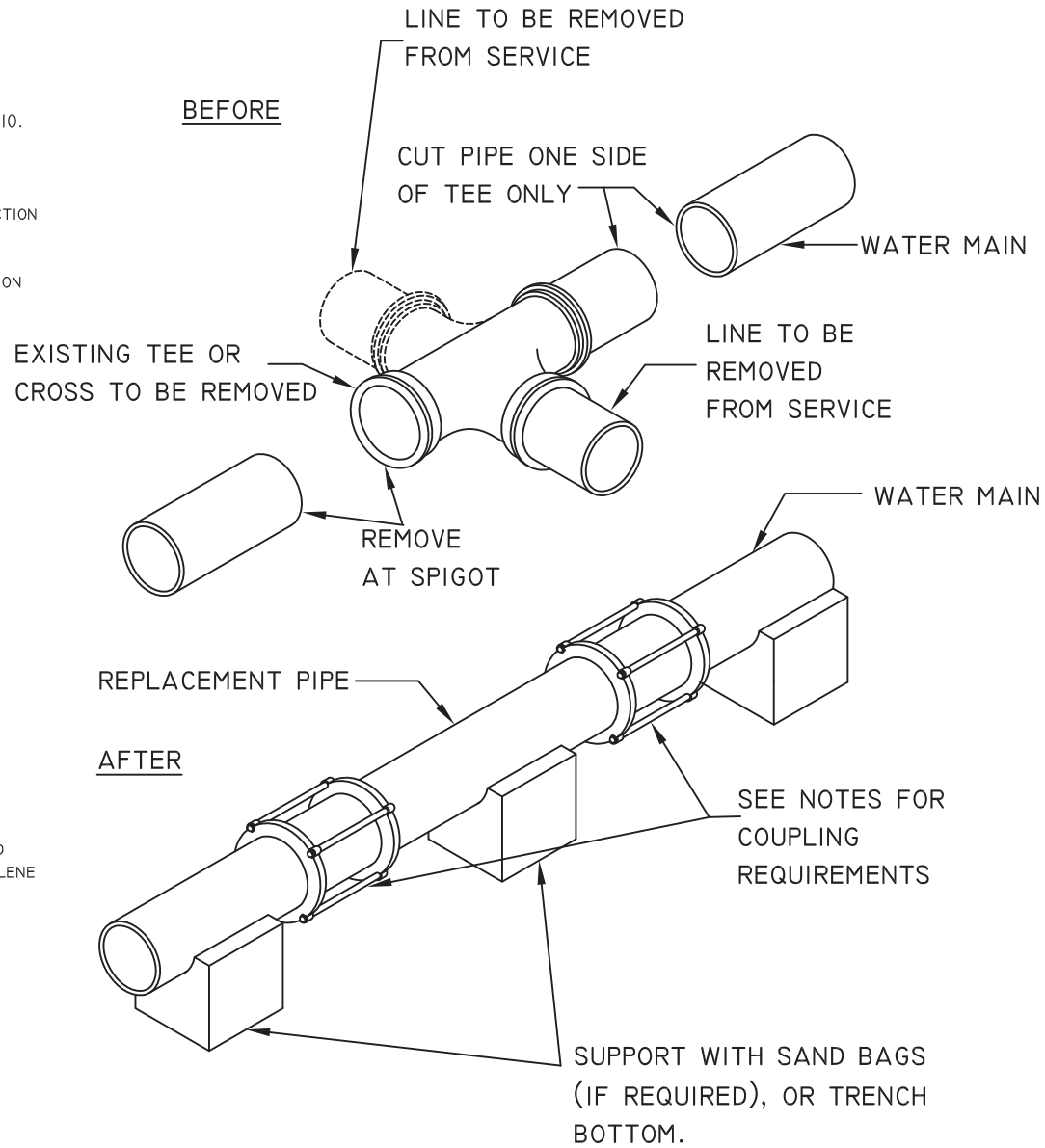

APPROVED:

CITY ENGINEER

DATE: 9/1/13

CITY OF HUNTINGTON BEACH

DEPARTMENT OF PUBLIC WORKS

WATERLINE CUT OUT (TEES & CROSSES) FOR 12" DIA. MAIN AND SMALLER

STANDARD PLAN 613A

BEARING BLOCKS FOR TEES, PLUGS, REDUCERS AND HORIZONTAL AND VERTICAL UP BENDS

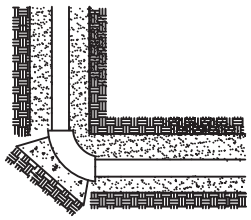

90 DEGREE HORIZONTAL BEND AND VERTICAL UP BEND

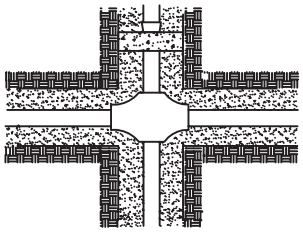

REDUCER

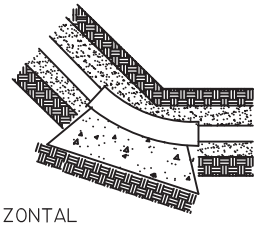

HORIZONTAL BEND AND VERTICAL UP BEND

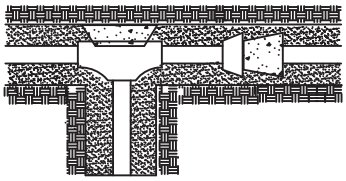

TEE AND PLUG

BEARING AREA SQUARE FEET

PIPE DIAMETER	TEES, PLUGS & REDUCERS	90° BEND	45° BENDS	22 1/2° BENDS	11 1/4° BENDS
4 & 6	4	6	3	2	1
8	7	10	5	3	2
12	15	21	12	6	3

GENERAL NOTES FOR ALL BLOCKS

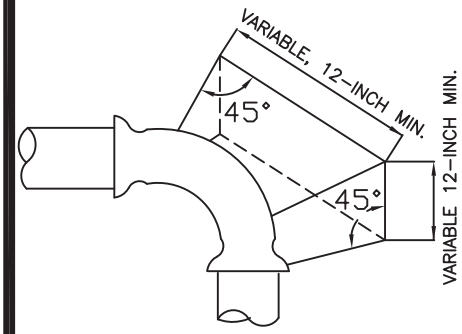

1. BEARING AREAS SHALL BE INCREASED AT THE OPTION OF CITY ENGINEER IF SOIL BEARING PRESSURE IS LESS THAN 1500 PSF.
2. CONCRETE SHALL BE PER SPECIFICATION 03300.
3. BEARING AREAS OF BLOCK IN LINE OF RESULTANT THRUST SHALL BE AGAINST UNDISTURBED EARTH.
4. TIE BARS SHALL BE 1/2" EPOXY COATED REBAR (PER ASTM 767 AND D3983) OR STAINLESS STEEL (WHEN EXPOSED) WITH ACI HOOKED ENDS. ALL REBAR EXPOSED TO SOIL SHALL BE GREASED AND WRAPPED WITH NO OX ID "A" SPECIAL GREASE AND WRAP.
5. MINIMUM CONCRETE THICKNESS = 12 INCHES.
6. THRUST BLOCKS FOR PIPE SIZES LARGER THAN 12-INCHES SHALL BE DETERMINED BY THE DESIGN ENGINEER, AND APPROVED BY THE CITY ENGINEER, DESIGN CRITERIA SHALL BE MAXIMUM SOIL BEARING CAPACITY OF 1500 LBS/SQFT OR SITE CONDITIONS WHICH EVER IS LESS, A DESIGN PRESSURE OF 150 PSI, AND A FACTOR SAFETY OF 1.5.

GRAVITY BLOCKS FOR VALVES, CROSSES AND VERTICAL DOWN BENDS

VALVES

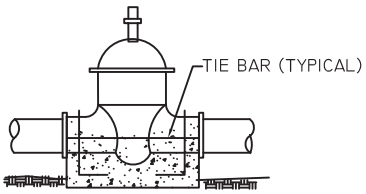

CROSS

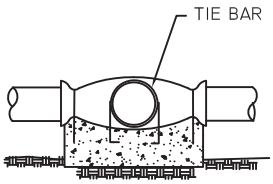

VERTICAL DOWN BEND, 90°, 45°, 22.5°

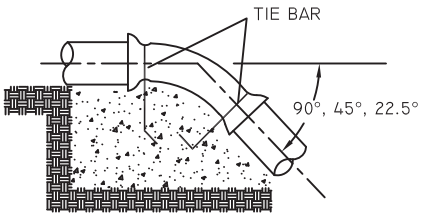

PIPE DIAMETER	VALVES AND CROSSES	90° VERTICAL DOWN	45° VERTICAL DOWN	22.5° VERTICAL DOWN
4"	21 CUBIC FEET	21 CUBIC FEET	11 CUBIC FEET	7 CUBIC FEET
6"	1.5 CUBIC YARD	1.5 CUBIC YARD	21 CUBIC FEET	10 CUBIC FEET
8"	2.5 CUBIC YARDS	2.5 CUBIC YARDS	1.5 CUBIC YARD	19 CUBIC FEET
12"	6 CUBIC YARDS	6 CUBIC YARDS	3 CUBIC YARDS	1.5 CUBIC YARD

APPROVED:

CITY ENGINEER

DATE: 9/1/13

CITY OF HUNTINGTON BEACH

DEPARTMENT OF PUBLIC WORKS

THRUST BLOCKS

STANDARD PLAN

614

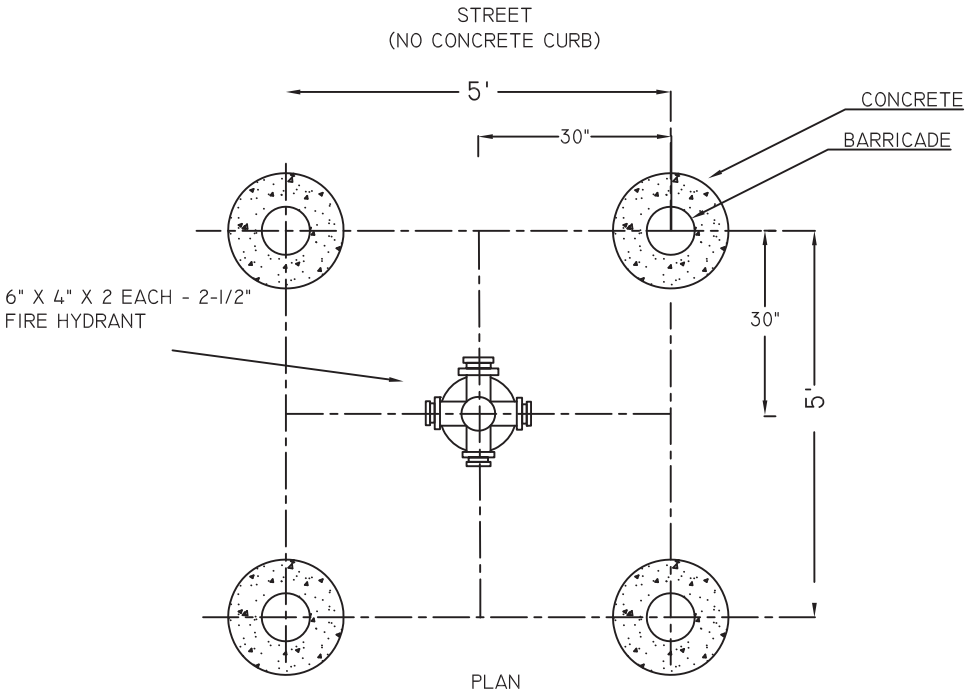

PLAN
FIRE HYDRANT BARRICADES
(TYPICAL)

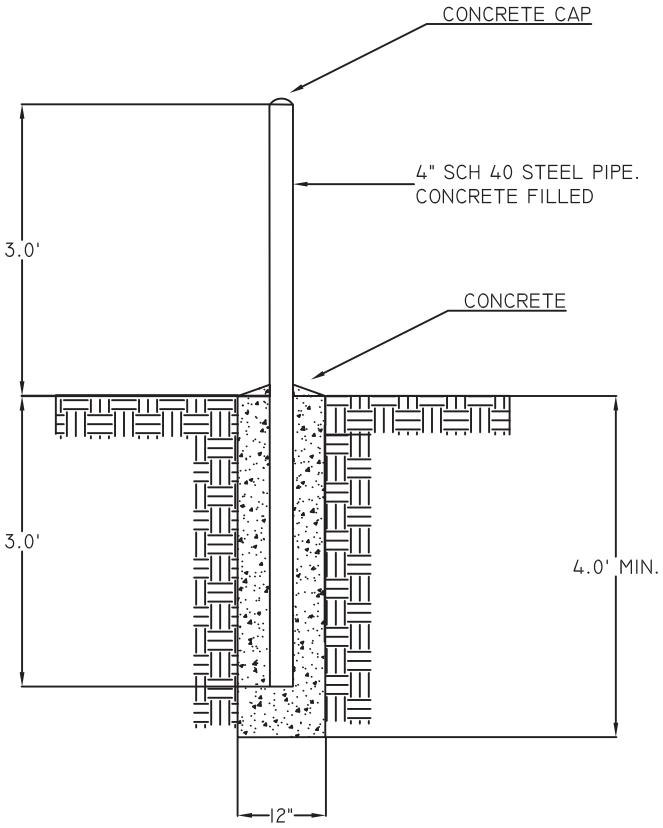

BARRICADE DETAILS

NOTES:

1. SEE DRAWINGS FOR NUMBERS OF BARRICADES TO BE USED.
2. VERIFY LOCATION OF BARRICADES WITH THE PUBLIC WORKS INSPECTOR.
3. FIRE HYDRANT BARRICADES TO BE PRIMED AND PAINTED SAME AS HYDRANTS.
4. BARRICADES SHALL NOT INTERFERE WITH OPERATIONS OF HYDRANT.

APPROVED:

CITY ENGINEER

DATE: 9/1/13

CITY OF HUNTINGTON BEACH

DEPARTMENT OF PUBLIC WORKS

PIPE BARRICADE ASSEMBLY

STANDARD PLAN

615

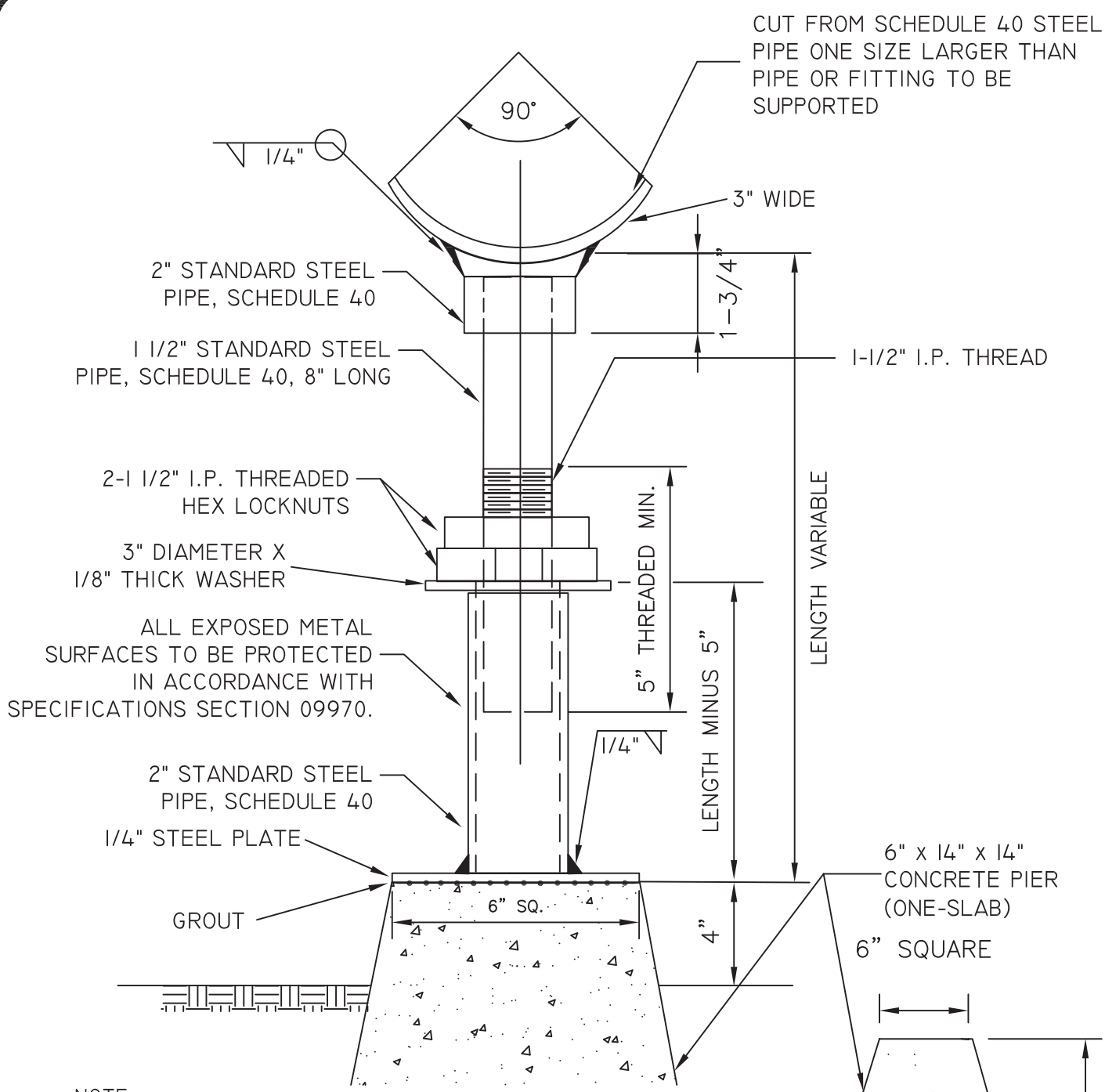

NOTE

1. IN EVENT SUPPORT IS MOUNTED ON CONCRETE SLAB OR FLOOR , PIER NOT REQUIRED
2. REFER TO GENERAL NOTES STANDARD PLAN 100.
3. ALL PIPING AND PLATES SHALL BE HOT DIPPED GALVANIZED AFTER FABRICATION
4. PREFABRICATED ADJUSTABLE SUPPORTS MAY BE SUBSTITUTED WITH CITY APPROVAL.

APPROVED:

CITY ENGINEER

DATE: 9/1/13

CITY OF HUNTINGTON BEACH

DEPARTMENT OF PUBLIC WORKS

ADJUSTABLE PIPE SUPPORT DETAIL ASSEMBLY

STANDARD PLAN 616

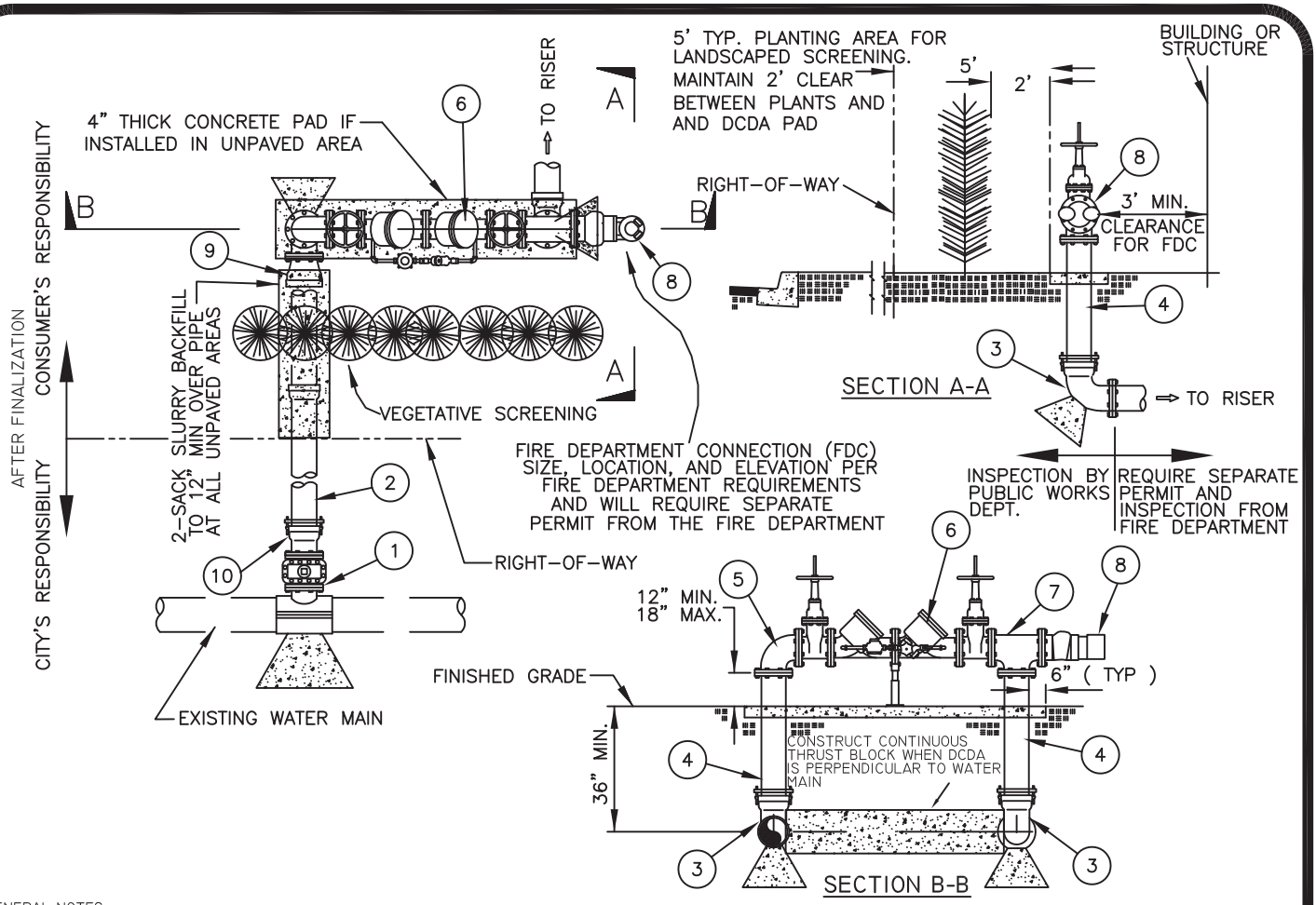

GENERAL NOTES:

1. ALL DUCTILE IRON SPOOLS SHALL BE ONE PIECE, CLASS 53, FLANGED, AND SHALL BE INSTALLED PER THE CITY OF HUNTINGTON BEACH STANDARD PLANS AND SPECIFICATIONS.
2. ALL FASTENERS SHALL BE TYPE 316 STAINLESS STEEL.
3. PIPE SUPPORT(S) ARE REQUIRED PER STANDARD PLAN 616.
4. ALL ABOVE GROUND PIPING, INCLUDING BACKFLOW DEVICE, SHALL BE PAINTED ACCORDING TO SPEC. 02087.2. THE MARKINGS, INDICATION FLOW, SIZE, MODEL NUMBER, AND SERIAL NUMBER SHALL BE PERMANENTLY FIXED TO THE BODY OF THE BACKFLOW DEVICE, AND MUST REMAIN VISIBLE AFTER PAINTING.
5. CONTRACTOR MUST POSSESS AN A OR C34 CONTRACTORS LICENSE TO PERFORM THE FIRE SERVICE CONSTRUCTION.
6. ALL FITTINGS SHALL BE DUCTILE IRON.
7. ALL FITTINGS SHALL BE INSTALLED PER STANDARD PLAN 614.
8. IMMEDIATELY AFTER INSTALLATION, RELOCATION, OR REPAIR, ALL BACKFLOW PREVENTION DEVICES SHALL BE TESTED BY A CERTIFIED TESTER APPROVED BY THE CITY OF HUNTINGTON BEACH. NO SERVICE SHALL BE DEEMED ACCEPTABLE UNTIL THE DEVICE IS TESTED AND CERTIFIED AFTER INSTALLATION.
9. RPDA REQUIRED FOR USE WITH FIRE FOAM SYSTEM OR WITH WHARF HYDRANT SYSTEM.

ITEM	DESCRIPTION	SPECIFICATION	QTY
1	TEE AND VALVE OR TAPPING TEE AND VALVE, PER STD. 619, 4" MIN OR DCDA SIZE WHICH EVER IS GREATER	02085.9	1
2	PVC PIPE OR D.I. PIPE LATERAL. (4" MIN.) SEE APPROVED PROJECT DRAWINGS.	02510.9	AR
3	D.I. 90° ELL, CL.350, FLANGED OR MJ RESTRAINED, P.E. WRAPPED, W/THRUST BLOCK PER STANDARD 614.	02510.1	1
4	D.I. FLG X MJ, TC 53, P.E. WRAPPED – LENGTH AS REQUIRED.	02510.1	2
5	D.I. 90° ELL, CL. 350, FLG. X FLG. (TYP)	02510.1	1
6	DOUBLE CHECK DETECTOR CHECK (2.5" MIN.), WITH 3/4" METER, NON-TOUCH READ PER CALIFORNIA DEPARTMENT OF PUBLIC HEALTH APPROVED LIST, AND SIZE PER FIRE DEPARTMENT	02087.2	1
7	D.I. FLANGED TEE, CL. 350, WITH FLANGED BRANCH, FOR FDC	02085.9	1
8	MINIMUM DIAMETER PER FIRE DEPT. WITH APPROVED CHECK VALVE AND FDC	--	--
9	REDUCER IF REQUIRED FLG OR MJ RESTRAINED	02510.1	AR
10	FLG X PO ADAPTER	02510.1	1

APPROVED:

CITY ENGINEER

DATE: 11/17/16

CITY OF HUNTINGTON BEACH

DEPARTMENT OF PUBLIC WORKS

2.5" – 10" DOUBLE CHECK DETECTOR ASSEMBLY (DCDA) (FIRE SERVICE ONLY)

STANDARD PLAN

618

NOTES

1. TAPPING SLEEVE TO BE PLACED A MINIMUM OF 3' FROM ANY BELL COUPLING, VALVE, FITTING, OR OTHER OBSTRUCTION.
2. CONTRACTOR SHALL EXCAVATE AS SHOWN AND SHALL SET TAPPING SLEEVE AND VALVE AND TIGHTEN ALL BOLTS PRIOR TO THE PRESSURE TEST.
3. ALL TAPPING SLEEVES AND VALVES MUST BE PRESSURE TESTED. THE TEST MUST BE WITNESSED AND APPROVED BY THE INSPECTOR.
4. ALL FLANGE BOLTS SHALL BE FREE AND CLEAR OF CONCRETE.
5. THRUST BLOCKS AND RESTRAINED JOINTS SHALL CONFORM TO STANDARD PLAN NUMBER 614.
6. ALL NUTS, BOLTS, AND WASHERS SHALL BE GRADE 316 STAINLESS STEEL.
7. APPLY NO-OX-ID "A SPECIAL WW" GREASE AND PROTECTIVE WRAP ON ALL BURIED FITTINGS. ALL FITTINGS SHALL ALSO BE POLYETHYLENE ENCASED PER AWWA C105

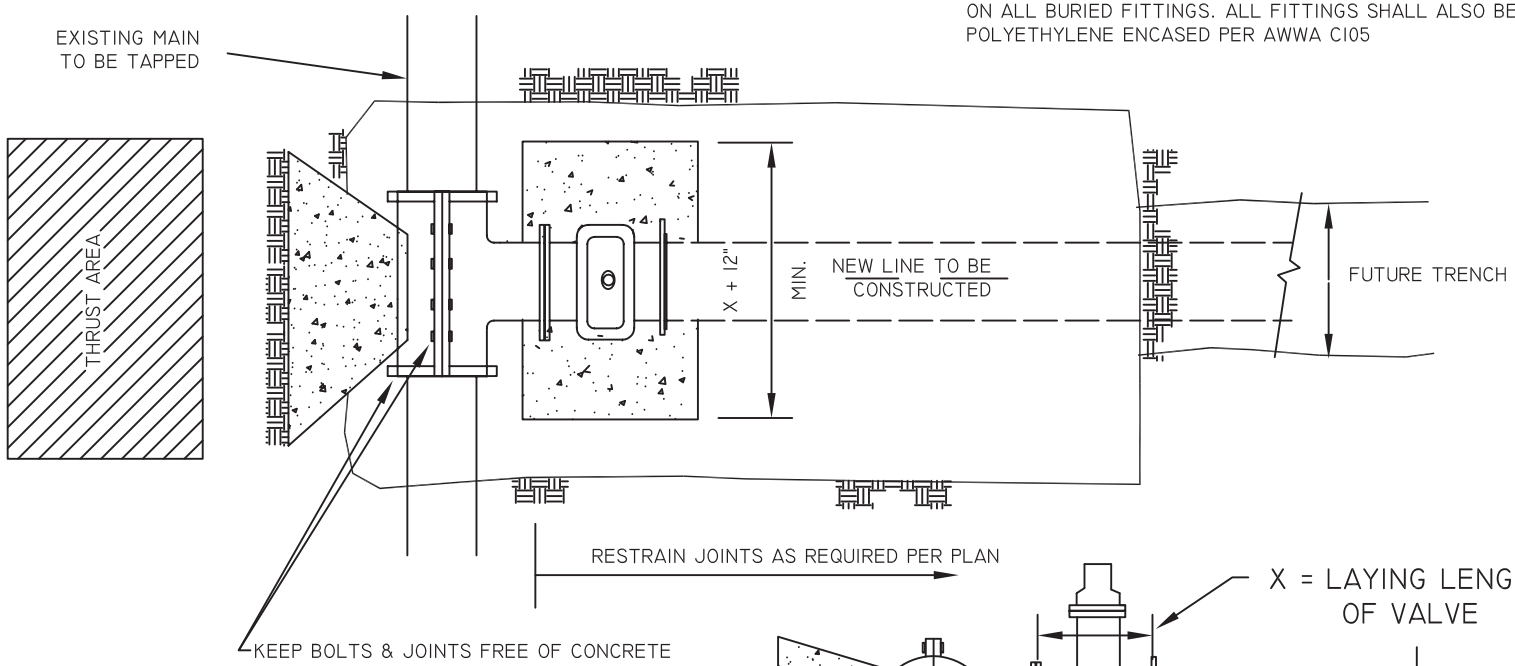

PLAN

CONCRETE: CLASS "C" PER SECTION 03300
NORMALLY, CURE 24 HOURS BEFORE BACKFILLING.

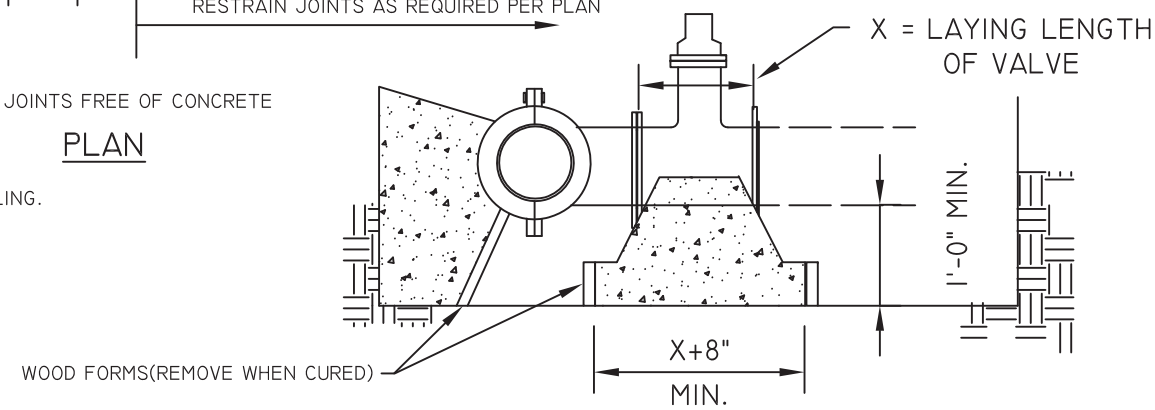

ELEVATION

APPROVED:

CITY ENGINEER

DATE: 9/01/13

CITY OF HUNTINGTON BEACH

DEPARTMENT OF PUBLIC WORKS

INSTALLING TAPPING SLEEVES AND VALVES

STANDARD PLAN

619

1 of 2

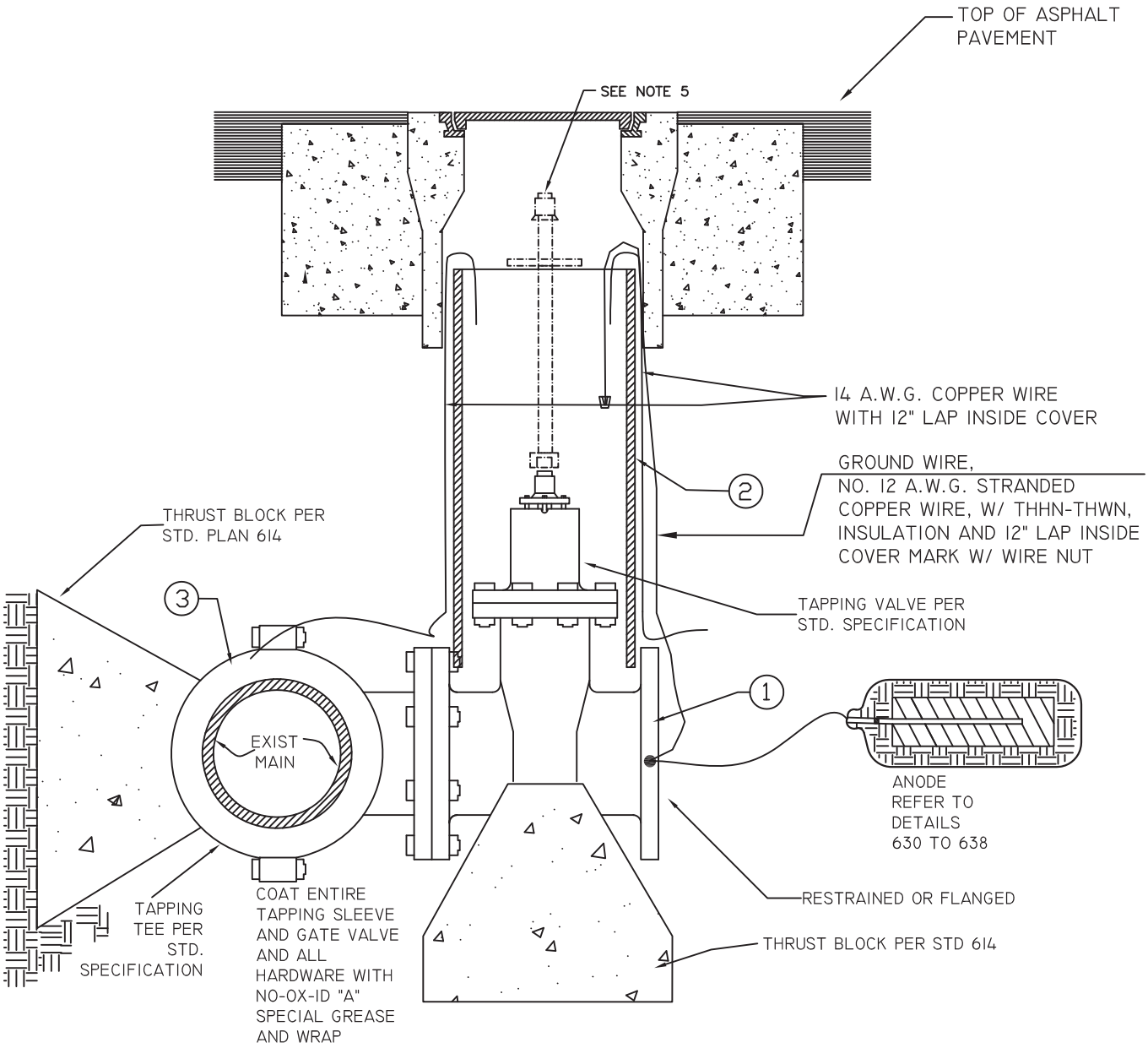

GENERAL NOTES

1) ALL NUTS AND BOLTS AND WASHERS FOR GATE VALVES AND TAPPING TEE TO BE GRADE 316 STAINLESS STEEL. ALL 316 SS NUTS SHALL BE FLUOROPOLYMER COATED, TRIPAC 2000 BLUE.

2) NO-OX-ID "A" SPECIAL GREASE AND NO-OX-ID PROTECTIVE TAPE SHALL BE PROVIDED ON ALL 316 SS BOLTED FITTINGS.

3) TAPPING SLEEVE TO BE PLACED A MINIMUM OF 3' FROM ANY BELL, COLLAR, VALVE, FITTING, OR OTHER OBSTRUCTION, CENTER TO CENTER.

4) ALL TAPPING SLEEVES AND VALVES MUST BE PRESSURE TESTED. THE TEST MUST BE WITNESSED AND APPROVED BY THE INSPECTOR.

5) REFER TO STD. 612A FOR VALVE STEM EXTENSION REQUIREMENTS.

ITEM	DESCRIPTION	SPECIFICATION	QTY
1	RESILIENT SEAT GATE VALVE, FLG'D	02085.9	1
2	VALVE BOX PER STD 612, 612A		1
3	TAPPING SLEEVE, SS 304 W/304 TEE PLUG	02085.9	1

APPROVED:

CITY ENGINEER

DATE: 9/1/13

CITY OF HUNTINGTON BEACH

DEPARTMENT OF PUBLIC WORKS

HOT TAP

STANDARD PLAN

619

2 of 2

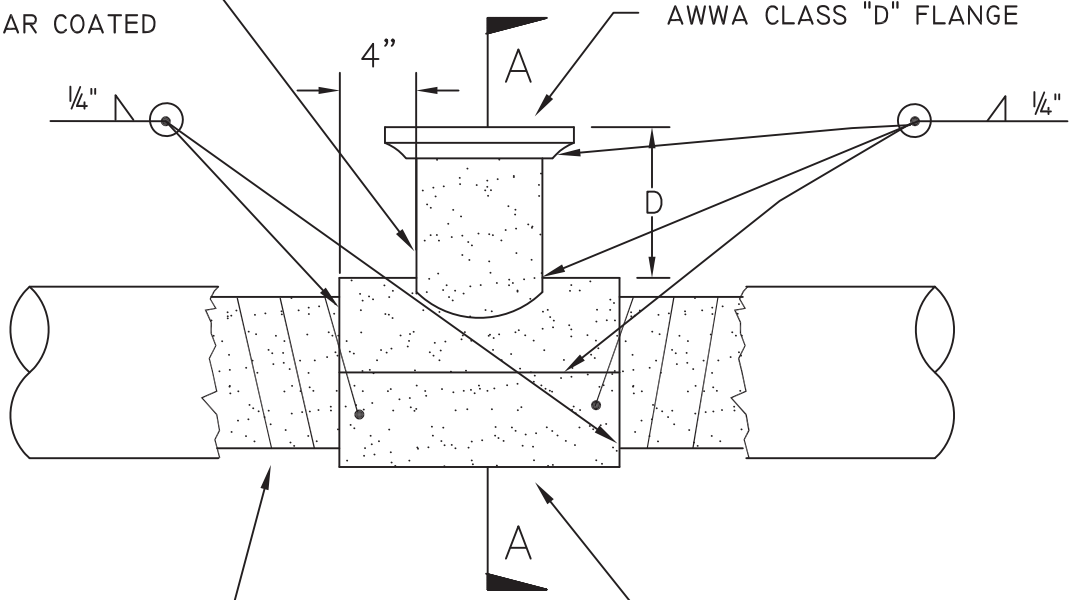

DO NOT CUT OR REMOVE SPIRAL WRAPPING ON CONCRETE CYLINDER PIPE MORE THAN NECESSARY. WELD END OF WRAPPING TO FULL WRAPPER

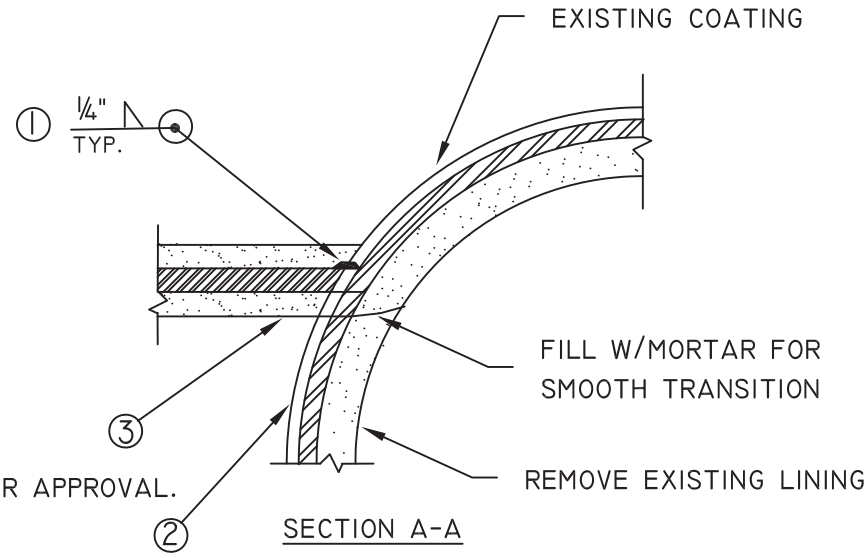

SECTION A-A

ORDER OF CONSTRUCTION

① SUBMIT SHOP DRAWINGS FOR APPROVAL.

② WELD NOZZLE TO PIPE.

③ TAP PIPE.

④ FILL VOID WITH MORTAR FOR SMOOTH TRANSITION.

⑤ DISINFECT AND TEST ALL MAINS PER SECTION 02516.

NOTE: THIS IS NOT A HOT TAP

TAP SIZE	D
4"	5"
6"	6"
8"	6¾"
12"	7½"

APPROVED:

CITY ENGINEER

DATE: 9/1/13

CITY OF HUNTINGTON BEACH

DEPARTMENT OF PUBLIC WORKS

STANDARD TAP OF STEEL MAIN

STANDARD PLAN 620

PROFILE

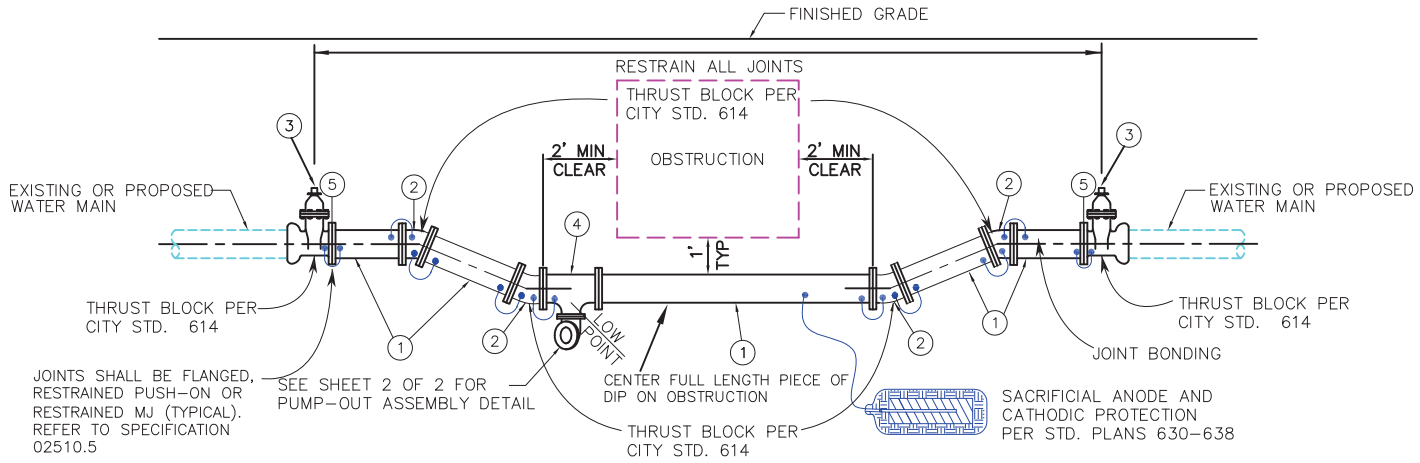

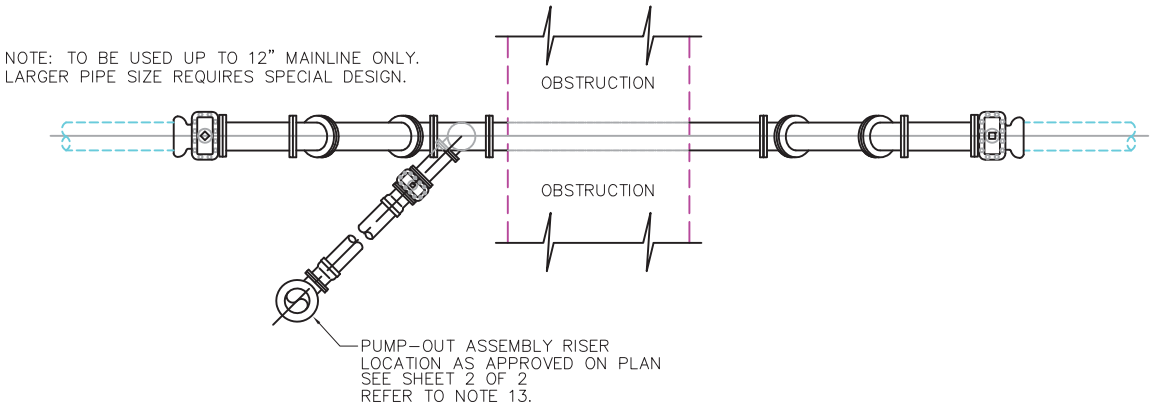

PLAN

NOTES:
1. THIS NOTE HEREIN REFERS TO THOSE NOTES AS SHOWN ON HUNTINGTON BEACH STANDARD PLANS 100A, 100B, & 100C.
2. ALL NEW PIPELINE MATERIAL SHALL BE THE SAME NOMINAL SIZE AS THE EXISTING WATER MAIN.
3. ALL FASTENERS (NUTS, BOLTS, AND WASHERS) SHALL BE TYPE 316 STAINLESS STEEL.
4. THE ENTIRE SIPHON ASSEMBLY SHALL BE POLYETHYLENE WRAPPED IN ACCORDANCE WITH AWWA C-105 (8 MIL).
5. ALL TIE BARS USED IN THRUST BLOCKS SHALL BE #4 TYPE 316 STAINLESS STEEL REINFORCING BAR WITH STD. ACI HOOKED ENDS OR EPOXY COATED REBAR. EXPOSED EPOXY COATED REBAR SHALL BE GREASED AND WRAPPED.
6. NO CUTTING OR MILLING OF ASBESTOS CEMENT PIPE SHALL BE PERFORMED. FOR CONNECTIONS TO EXISTING ASBESTOS CEMENT PIPE, REMOVE EXISTING ASBESTOS CEMENT PIPE TO NEAREST COUPLING OR USE OF SNAP CUTTERS AND CONNECT PVC WITH AN APPROVED TRANSITION COUPLING PER STD. 02088.
7. THE PUBLIC WORKS INSPECTION OFFICE SHALL BE CALLED FOR INSPECTION A MINIMUM OF TWO WORKING DAYS BEFORE START OF WORK AT (714) 536-5431.
8. A PRE-CONSTRUCTION CONFERENCE OF REPRESENTATIVES FROM THE AFFECTED AGENCIES AND THE CONTRACTOR SHALL BE ARRANGED BY THE CONTRACTOR AND BE HELD ON THE JOB SITE A MINIMUM OF 48 HOURS PRIOR TO START OF WORK.
9. ALL MAIN LINE VALVES SHALL BE MAINTAINED SO AS TO BE ACCESSIBLE DURING CONSTRUCTION.
10. THE CONTRACTOR SHALL EXPOSE ALL PROPOSED POINTS OF CONNECTION TO THE EXISTING WATER MAIN FOR VERIFICATION OF HORIZONTAL AND VERTICAL LOCATION AND OUTSIDE DIAMETER OF EXISTING PIPE BEFORE CONSTRUCTION BEGINS.
11. CONTRACTOR TO VERIFY OUTSIDE DIMENSION OF EXISTING AC PIPE PRIOR TO ORDERING TRANSITION COUPLING.
12. APPLY NO-OX-ID "A SPECIAL WW" GREASE AND PROTECTIVE WRAP ON ALL BURIED FITTINGS.

ITEM	DESCRIPTION OF MATERIAL	QTY
1	CONSTRUCT PC 350 DUCTILE IRON PIPE PER STANDARD 606. LENGTH AS REQUIRED. USE APPROVED RESTRAINED JOINTS PER STANDARD SPECIFICATION SECTION 02510.1 & 02510.5.	5
2	CONSTRUCT DUCTILE IRON RESTRAINED JOINT 22 1/2° ELL WITH THRUST BLOCK PER STANDARD PLAN 614.	4
3	CONSTRUCT RESTRAINED JOINT R.W. VALVE PER STANDARD PLANS 612 AND 614.	2
4	CONSTRUCT RESTRAINED JOINT DUCTILE IRON TEE WITH 4 INCH BRANCH PER STANDARD PLAN 614.	1
5	TEST PLATE LOCATION FOR HYDROSTATIC TEST, AS REQUIRED.	2

APPROVED:

CITY ENGINEER

DATE: 9/1/13

CITY OF HUNTINGTON BEACH

DEPARTMENT OF PUBLIC WORKS

INVERTED SIPHON ASSEMBLY FOR 12" PIPE AND SMALLER

STANDARD PLAN 621

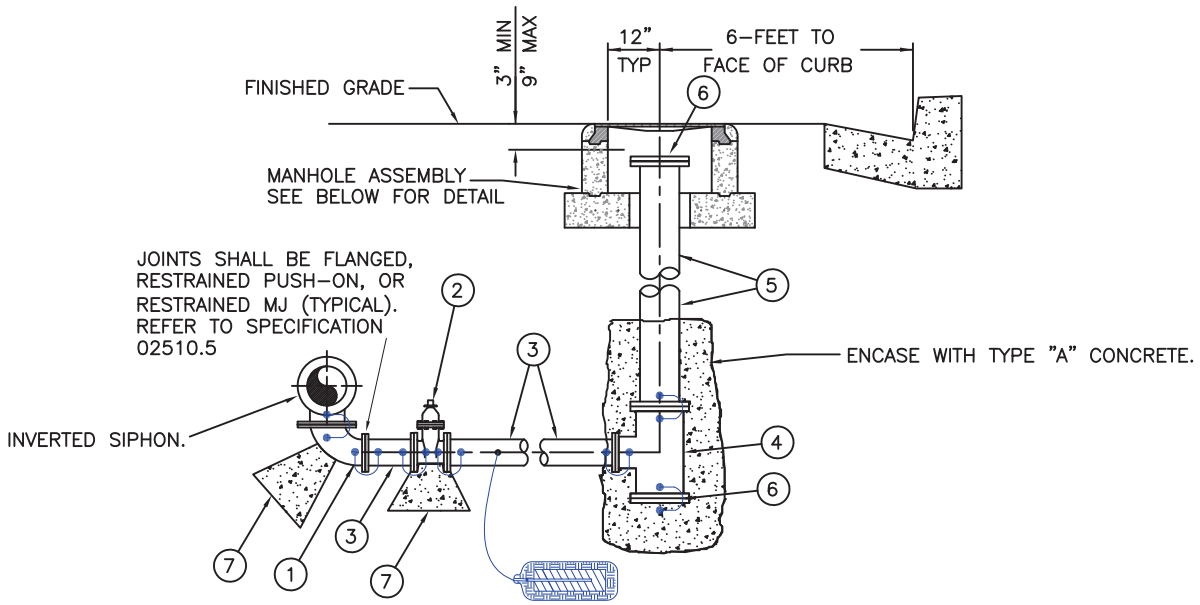

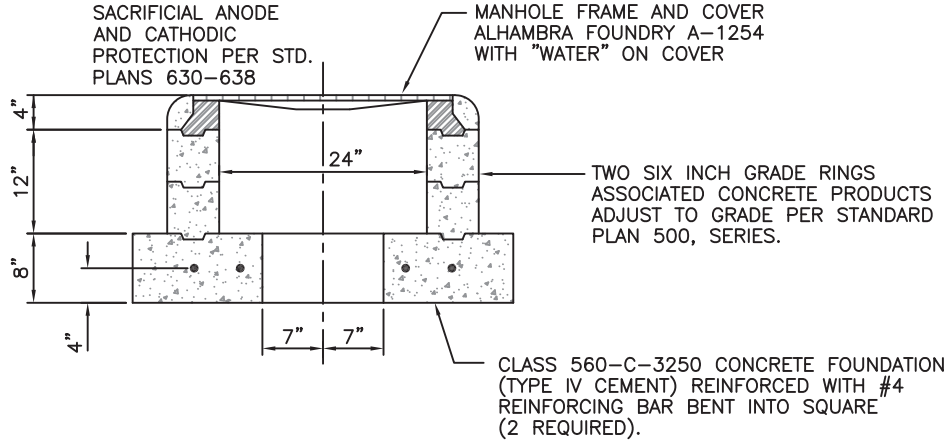

NOTES:
1. THIS NOTE HEREIN REFERS TO THOSE NOTES AS SHOWN ON HUNTINGTON BEACH STANDARD PLANS 100A, 100B, & 100C.
2. ALL NEW PIPELINE MATERIAL SHALL BE THE SAME NOMINAL SIZE AS THE EXISTING WATER MAIN.
3. ALL FASTENERS (NUTS, BOLTS, AND WASHERS) SHALL BE TYPE 316 STAINLESS STEEL.
4. THE ENTIRE SIPHON ASSEMBLY SHALL BE POLYETHYLENE WRAPPED IN ACCORDANCE WITH AWWA C-105 (8 MIL).
5. ALL TIE BARS USED IN THRUST BLOCKS SHALL BE #4 TYPE 316 STAINLESS STEEL REINFORCING BAR WITH STD. ACI HOOKED ENDS OR EPOXY COATED REBAR. EXPOSED EPOXY COATED REBAR SHALL BE GREASED AND WRAPPED.
6. NO CUTTING OR MILLING OF ASBESTOS CEMENT PIPE SHALL BE PERFORMED. FOR CONNECTIONS TO EXISTING ASBESTOS CEMENT PIPE, REMOVE EXISTING ASBESTOS CEMENT PIPE TO NEAREST COUPLING AND CONNECT PVC WITH AN APPROVED TRANSITION COUPLING PER STD. 02088.
7. THE PUBLIC WORKS INSPECTION OFFICE SHALL BE CALLED FOR INSPECTION A MINIMUM OF TWO WORKING DAYS BEFORE START OF WORK AT (714) 536-5431.
8. A PRE-CONSTRUCTION CONFERENCE OF REPRESENTATIVES FROM THE AFFECTED AGENCIES AND THE CONTRACTOR SHALL BE ARRANGED BY THE CONTRACTOR AND BE HELD ON THE JOB SITE A MINIMUM OF 48 HOURS PRIOR TO START OF WORK.
9. ALL MAIN LINE VALVES SHALL BE MAINTAINED SO AS TO BE ACCESSIBLE DURING CONSTRUCTION.
10. THE CONTRACTOR SHALL EXPOSE ALL PROPOSED POINTS OF CONNECTION TO THE EXISTING WATER MAIN FOR VERIFICATION OF HORIZONTAL AND VERTICAL LOCATION AND OUTSIDE DIAMETER OF EXISTING PIPE BEFORE CONSTRUCTION BEGINS.
11. CONTRACTOR TO VERIFY OUTSIDE DIMENSION OF EXISTING AC PIPE PRIOR TO ORDERING TRANSITION COUPLING.
12. APPLY NO-OX-ID "A SPECIAL WW" GREASE AND PROTECTIVE WRAP ON ALL BURIED FITTINGS.

ITEM	DESCRIPTION OF MATERIAL	QTY
1	CONSTRUCT 4 INCH RESTRAINED DUCTILE IRON 90° ELL WITH THRUST BLOCK PER STANDARD PLAN 614.	1
2	CONSTRUCT 4 INCH RESTRAINED R/W VALVE PER STANDARD PLANS 612 AND 614.	1
3	CONSTRUCT 4 INCH RESTRAINED DUCTILE IRON PIPE, LENGTH AS REQUIRED	2
4	CONSTRUCT 8 INCH RESTRAINED DUCTILE IRON TEE WITH 4 INCH BRANCH.	1
5	CONSTRUCT 8 INCH RESTRAINED DUCTILE IRON, LENGTH AS REQUIRED.	1
6	CONSTRUCT 8 INCH DUCTILE IRON FLANGE WITH BLIND FLANGE.	2
7	THRUST BLOCK PER PLAN 614	1

APPROVED:

CITY ENGINEER

DATE: 9/1/13

CITY OF HUNTINGTON BEACH

DEPARTMENT OF PUBLIC WORKS

INVERTED SIPHON ASSEMBLY FOR 12" PIPE AND SMALLER

STANDARD PLAN

621

2 OF 2

PROFILE

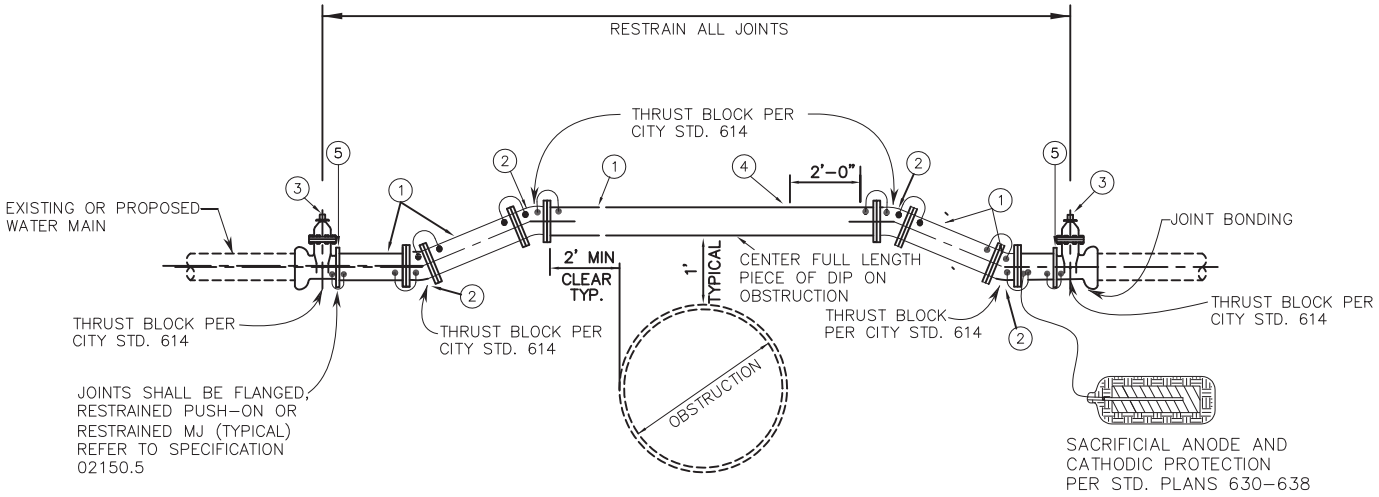

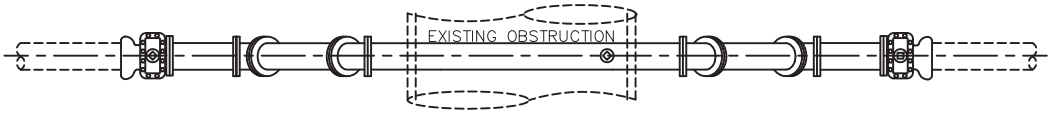

PLAN

NOTES:
1. THIS NOTE HEREIN REFERS TO THOSE NOTES AS SHOWN ON HUNTINGTON BEACH STANDARD PLANS 100A, 100B, & 100C.
2. ALL NEW PIPELINE MATERIAL SHALL BE THE SAME NOMINAL SIZE AS THE EXISTING WATER MAIN.
3. ALL FASTENERS (NUTS, BOLTS, AND WASHERS) SHALL BE TYPE 316 STAINLESS STEEL.
4. THE ENTIRE SIPHON ASSEMBLY SHALL BE POLYETHYLENE WRAPPED IN ACCORDANCE WITH AWWA C-105 (8 MIL).
5. ALL TIE BARS USED IN THRUST BLOCKS SHALL BE #4 TYPE 316 STAINLESS STEEL REINFORCING BAR WITH STD. ACI HOOKED ENDS OR EPOXY COATED REBAR. EXPOSED EPOXY COATED REBAR SHALL BE GREASED AND WRAPPED.
6. NO CUTTING OR MILLING OF ASBESTOS CEMENT PIPE SHALL BE PERFORMED. FOR CONNECTIONS TO EXISTING ASBESTOS CEMENT PIPE, REMOVE EXISTING ASBESTOS CEMENT PIPE TO NEAREST COUPLING OR USE OF SNAP CUTTERS AND CONNECT PVC WITH AN APPROVED TRANSITION COUPLING PER STD. 02088.
7. THE PUBLIC WORKS INSPECTION OFFICE SHALL BE CALLED FOR INSPECTION A MINIMUM OF TWO WORKING DAYS BEFORE START OF WORK AT (714) 536-5431.
8. A PRE-CONSTRUCTION CONFERENCE OF REPRESENTATIVES FROM THE AFFECTED AGENCIES AND THE CONTRACTOR SHALL BE ARRANGED BY THE CONTRACTOR AND BE HELD ON THE JOB SITE A MINIMUM OF 48 HOURS PRIOR TO START OF WORK.
9. ALL MAIN LINE VALVES SHALL BE MAINTAINED SO AS TO BE ACCESSIBLE DURING CONSTRUCTION.
10. THE CONTRACTOR SHALL EXPOSE ALL PROPOSED POINTS OF CONNECTION TO THE EXISTING WATER MAIN FOR VERIFICATION OF HORIZONTAL AND VERTICAL LOCATION AND OUTSIDE DIAMETER OF EXISTING PIPE BEFORE CONSTRUCTION BEGINS.
11. CONTRACTOR TO VERIFY THE OUTSIDE DIAMETER OF THE EXISTING AC PIPE PROIR TO ORDERING TRANSITION COUPLING.
12. APPLY NO-OX-ID "A SPECIAL WW" GREASE AND PROTECTIVE WRAP ON ALL BURIED FITTINGS.

ITEM	DESCRIPTION OF MATERIAL	SPECIFICATION	QTY
1	CONSTRUCT RESTRAINED PC 350 DUCTILE IRON PIPE PER STANDARD PLAN 606. LENGTH AS REQUIRED. USE APPROVED RESTRAINED JOINTS PER STANDARD SPECIFICATION SECTION 02510.1 AND 02510.5.	02510.1	5
2	CONSTRUCT RESTRAINED DUCTILE IRON 22 1/2" ELL WITH THRUST BLOCK PER STANDARD PLAN 614.	02510.1	4
3	CONSTRUCT RESTRAINED R.W. VALVE PER STANDARD PLANS 612 AND 614.	02085.9	2
4	CONSTRUCT STANDARD AIR-VAC ASSEMBLY PER STANDARD PLAN 611.	02085.3	1
5	TEST PLATE LOCATION FOR HYDROSTATIC TEST.		2

APPROVED: Tom Ward

CITY ENGINEER

DATE: 9/1/13

CITY OF HUNTINGTON BEACH

DEPARTMENT OF PUBLIC WORKS

SIPHON ASSEMBLY FOR 12" PIPE AND SMALLER

STANDARD PLAN 621A

SCHEDULE STEEL CASING FOR D.I. PIPE			
NOMINAL PIPE SIZE	MINIMUM CASING SIZE	MINIMUM WALL THICKNESS	SKIDS
6"	16" I.D.	3/8"	STAINLESS STEEL CASING INSULATORS
8"	18" I.D.	3/8"	
12"	24" I.D.	3/8"	

14" AND LARGER SEE APPROVED CONSTRUCTION PLANS

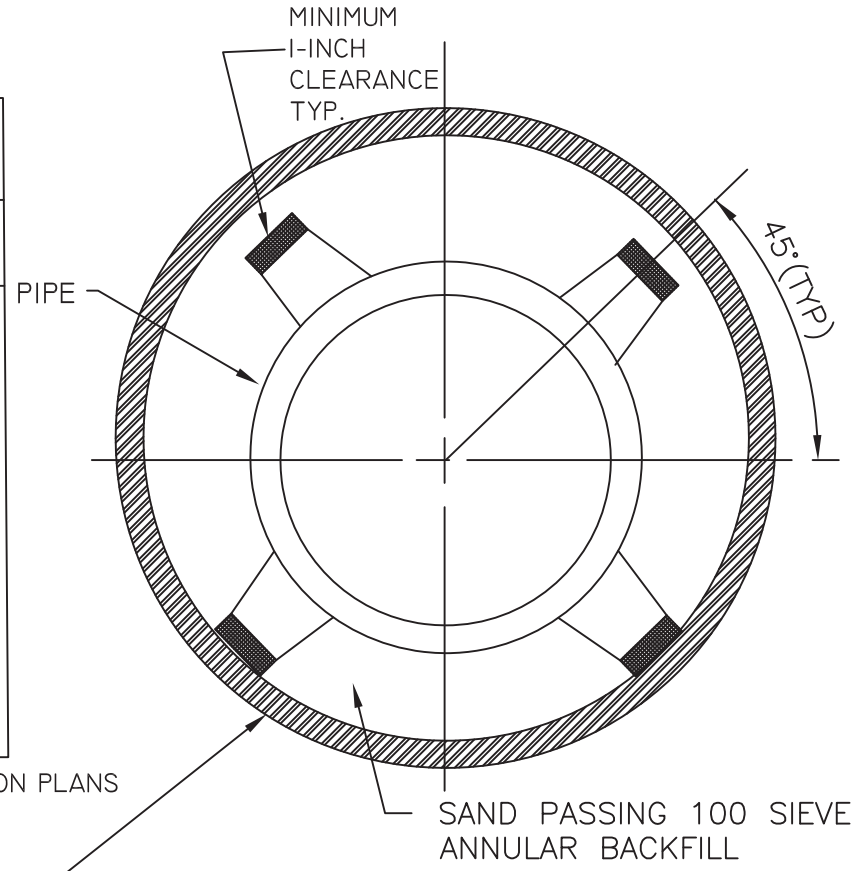

USE THREE CASING INSULATORS PER 18-20 FOOT LENGTH OF PIPE: ONE INSULATOR PLACED AT THE MID-SPAN OF THE PIPE, ONE INSULATOR BEHIND THE BELL OF THE PIPE AND ONE ON THE SPIGOT END. CARRIER PIPE TO BE CENTERED WITH IN THE CASING PIPE, EXCEPTING THE INSULATOR CLEARANCE. PLACE ONE INSULATOR WITHIN ONE FOOT OF EACH END OF THE CASING.

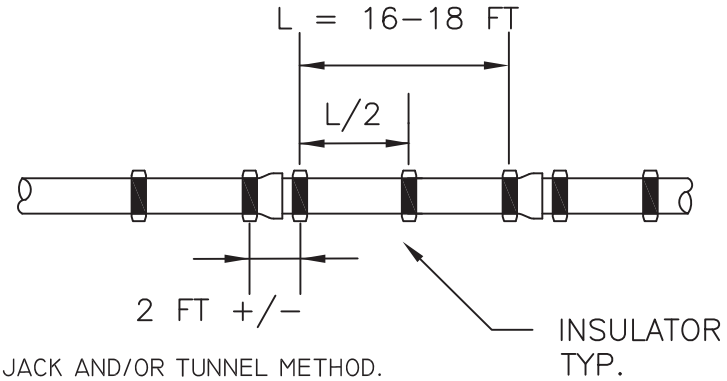

GENERAL NOTES

1. CASING SHALL BE INSTALLED BY THE BORE, JACK AND/OR TUNNEL METHOD.
2. SIZE AND THICKNESS OF CASING SHALL BE AS SHOWN IN SCHEDULE.
3. ALL CASING SECTIONS SHALL BE JOINED BY CONTINUOUS WELD
4. SEAL PIPE ENDS WITH LINK SEALS, AND END SEALS.
5. CARRIER PIPE SHALL BE DIP WITH APPROVED RESTRAINED JOINTS, AND POLYETHYLENE ENCASEMENT PER AWWA C105 UNDER THE CASING INSULATORS.
6. REFER TO SECTION 02445 FOR CASING PIPE AND CASING INSULATOR SPECIFICATION.

APPROVED:

CITY ENGINEER

DATE: 9/01/13

CITY OF HUNTINGTON BEACH

DEPARTMENT OF PUBLIC WORKS

STEEL CASING PIPE

STANDARD PLAN

622

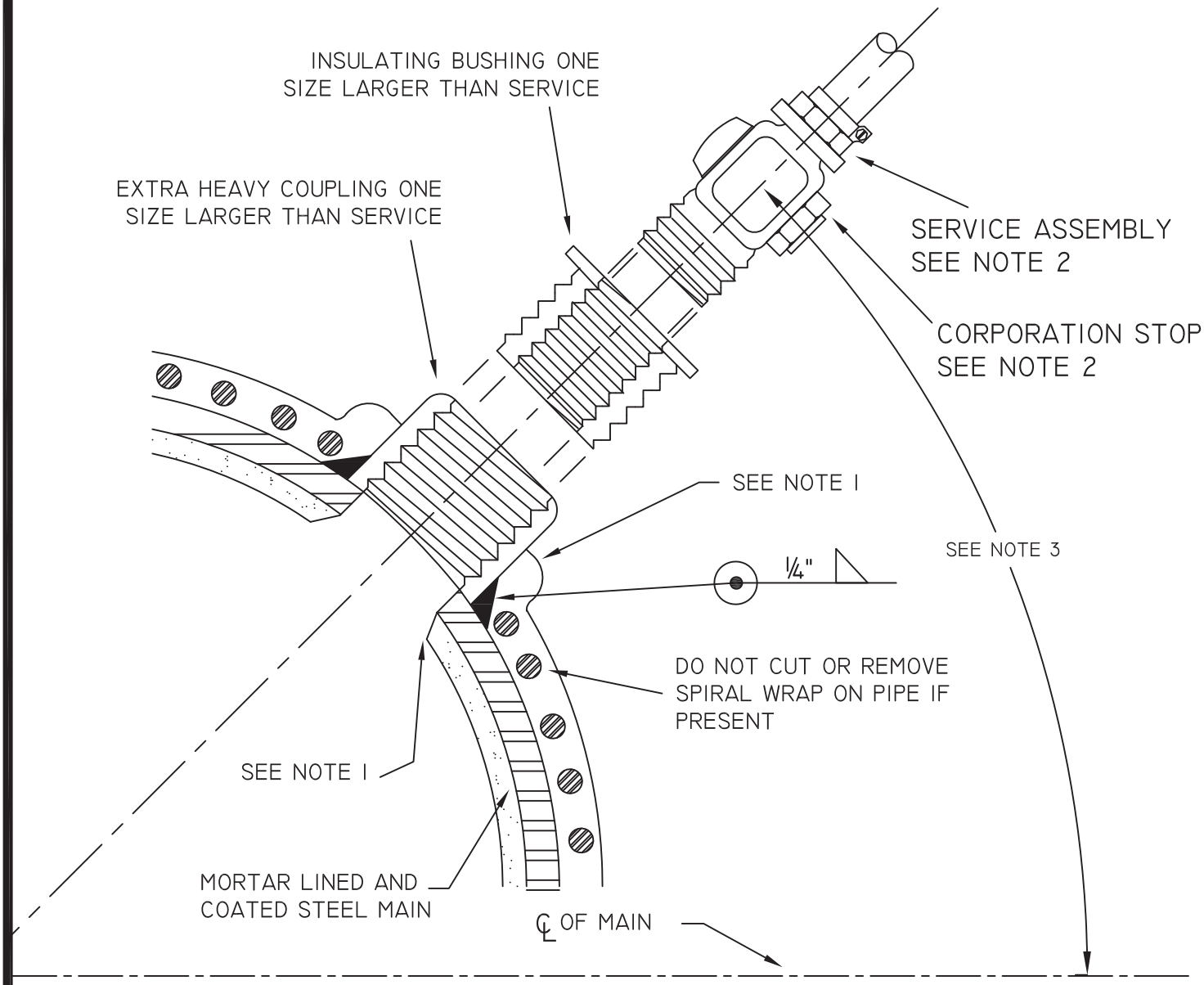

NOTES:

1. ALL LINING AND COATING DAMAGED OR REMOVED FOR INSTALLATION OF THE SERVICE TAP SHALL BE REPLACED TO ORIGINAL CONDITION UPON COMPLETION PER STD 09970.
2. REFER TO APPROPRIATE STANDARD PLAN NUMBER FOR WATER SERVICE ASSEMBLY DETAILS.
3. 22½° - 45° FOR SERVICE ASSEMBLY. 90° FOR AIR-VAC RELEASE ASSEMBLY.
4. SHUT DOWN PIPLINE BEFORE TAPPING.

APPROVED:

Tom Dal

CITY ENGINEER

DATE: 9/01/13

CITY OF HUNTINGTON BEACH

DEPARTMENT OF PUBLIC WORKS

TAPPING STEEL PIPE

STANDARD PLAN

623

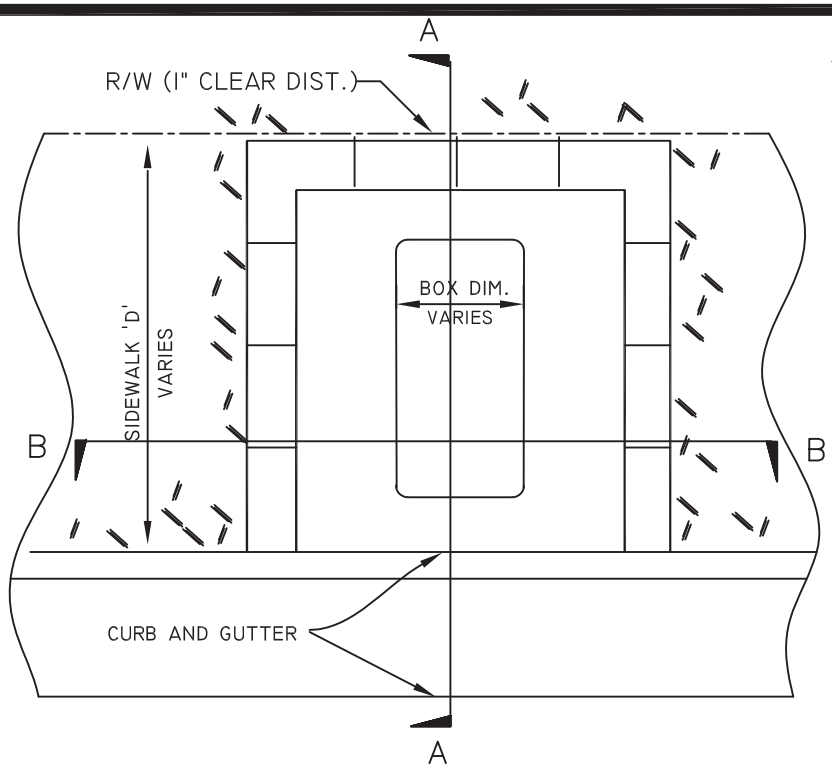

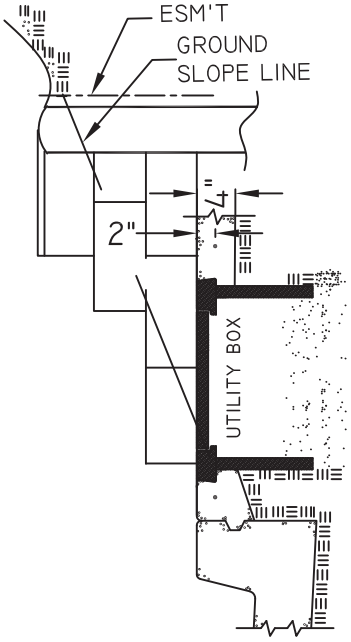

SECTION A-A

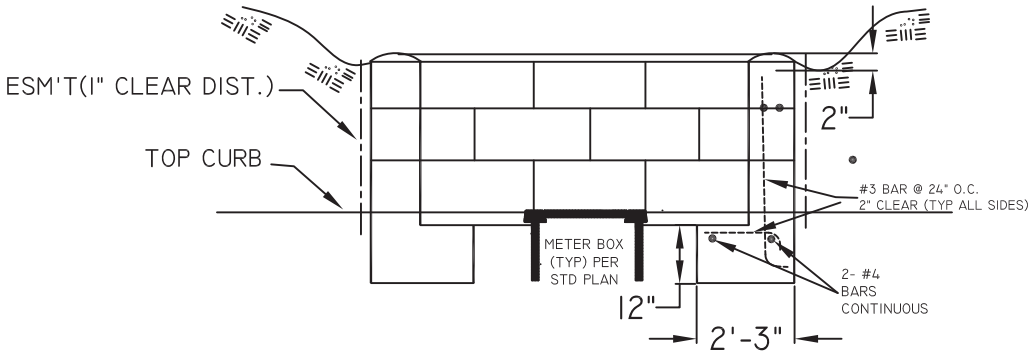

SECTION B-B

NOTES:

1.) IF WALL IS OVER 32" HIGH REFER TO BUILDING DEPARTMENT REQUIREMENT.

2.) PROVIDE WEEP HOLES ON BOTTOM COURSE @ 32" ON CENTER.

3.) CONCRETE IN FOOTING MINIMUM 2000 LBS @ 28 DAYS (420-C-2000).

4.) SOIL PRESSURE = 1000 LBS PER SQUARE FOOT.

5.) POUR FOOTING AGAINST UNDISTURBED SOIL.

6.) ALL CELLS SHALL BE FILLED WITH SOLID GROUT.

7.) MINIMUM 6" CONCRETE MASONRY BLOCK.

APPROVED:

CITY ENGINEER

DATE: 9/01/13

CITY OF HUNTINGTON BEACH

DEPARTMENT OF PUBLIC WORKS

UTIILITY BOX IN SLOPE

STANDARD PLAN

624

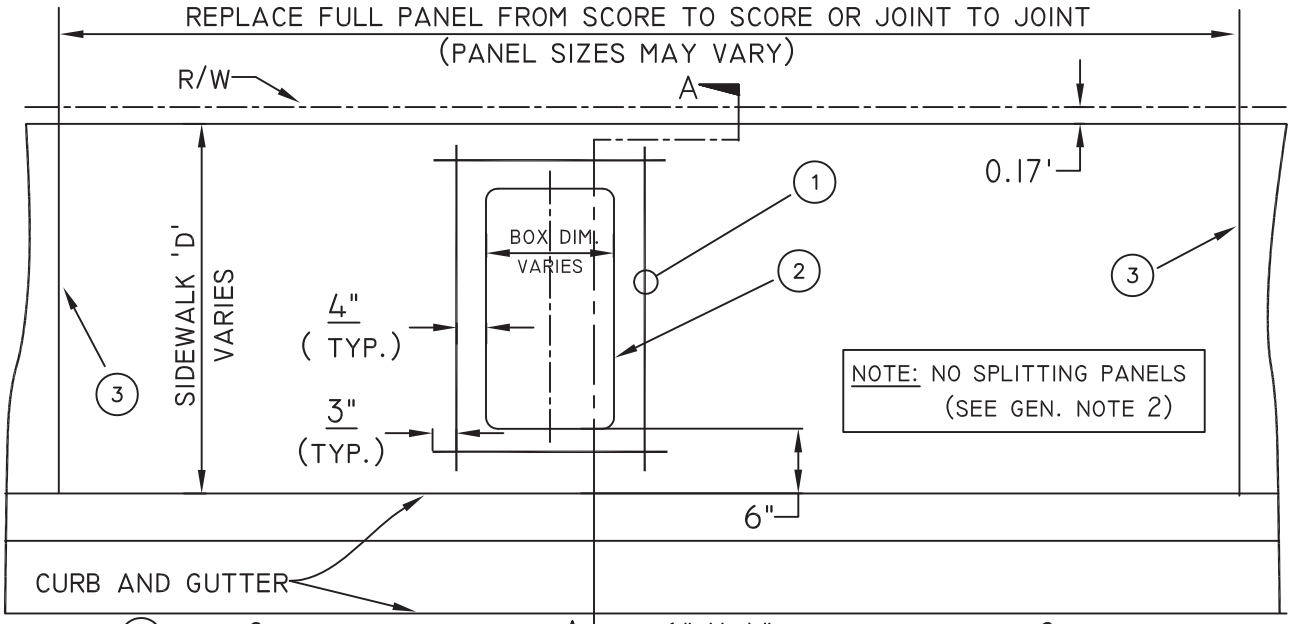

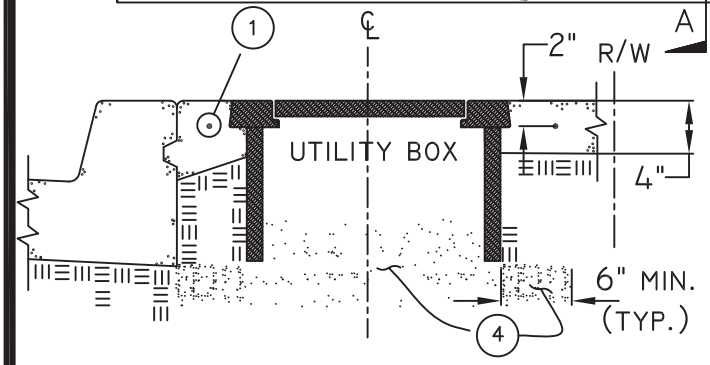

SECTION A-A

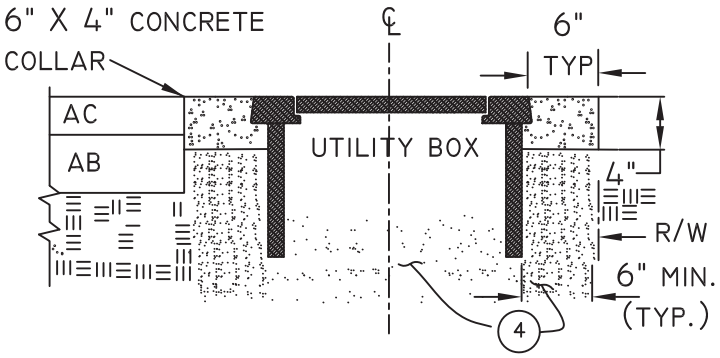

UTILITY WITHIN ALLEY

NOTES:

1. #4 REBAR SHALL BE INSTALLED WHENEVER UTILITY BOX OCCUPIES MORE THAN 70% OF SIDEWALK DIMENSION 'D'.
2. LOCATION OF UTILITY BOXES SHALL BE ADJACENT TO CURB UNLESS OTHERWISE APPROVED ON PLANS. BOX AND LOCATION SHALL BE DETAILED. PEDESTALS AND OTHER ABOVE GRADE OBJECTS SHALL BE SHOWN AND LOCATED BY DIMENSIONS TO THE NEAREST 0.1'
3. SAW CUT OR REMOVE TO EXISTING JOINT OR SCORE LINE.
4. ALL UTILITY BOXES SHALL BE PLACED ON A COMPACTED 6" MIN. PEA GRAVEL OR CRUSHED ¾ ROCK BEDDING.

SPECIAL PROVISIONS:

1. CONCRETE SIDEWALK SHALL BE A MIN. OF 5' IN WIDTH & BE SAW CUT PERPENDICULAR TO CURB FACE & REMOVED PENDING DISCRETION OF THE CITY INSPECTOR.

GENERAL NOTES:

1. UTILITY BOX PLACEMENT SHALL BE 1' MINIMUM FROM THE SCORE OR JOINT, OR CENTERED WITHIN THE PANEL.
2. THE LIMITS OF SIDEWALK REMOVAL IS TO THE DISCRETION OF THE CITY INSPECTOR.
3. ALL USA ALERT MARKINGS SHALL BE REMOVED FROM WORKSITE UPON COMPLETION.
4. THE TOP OF THE UTILITY BOX SHALL BE LEVEL WITH THE FINISH SIDEWALK OR FINISH ASPHALT WITH A MINUS $\frac{1}{8}$" MAX TOLLERANCE.

APPROVED:

Tom Dal

CITY ENGINEER

DATE: 11/17/16

CITY OF HUNTINGTON BEACH

DEPARTMENT OF PUBLIC WORKS

UTIILITY BOX DETAILS

STANDARD PLAN

625

EXOTHERMIC WELD DETAIL

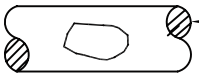

STEP 1
FILE OR GRIND SURFACE TO BRIGHT METAL, CLEAN

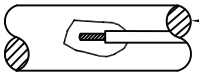

STEP 2
STRIP INSULATION FROM WIRE

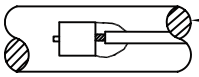

STEP 3
HOLD WELDER FIRMLY WITH OPENING AWAY FROM THE OPERATOR AND IGNITE STARTING POWDER

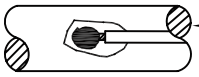

STEP 4
REMOVE SLAG FROM CONNECTION AND PEEN WELD FOR SOUNDNESS

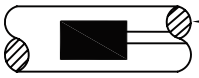

STEP 5
COVER THE CONNECTION AND EXPOSED STRUCTURE WITH A BITUMINOUS COATING AND A ROYSTON HANDY CAP

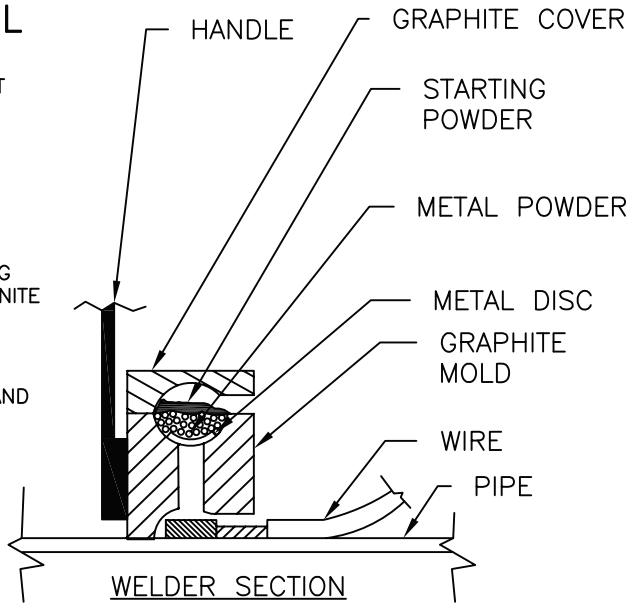

NOTES

1. WELDER SHOWN IS FOR HORIZONTAL SURFACES ONLY. FOR VERTICAL SURFACES A SIDE WELDER IS REQUIRED.
2. ALL WIRE WELDS SHALL BE A MINIMUM OF 3-INCHES APART.
3. STANDARD WELD CARTRIDGES SHALL BE USED FOR STEEL SURFACES. FOR DUCTILE IRON THE WELD METAL SHALL BE XF-19 ALLOY OR EQUIVALENT. USE APPROPRIATELY SIZED CHARGES AND MOLDS FOR THE WIRE GAGE AND POSITION.
4. EXTEND ROYBOND 747 COATING 3-INCH ONTO EXISTING PIPE COATING OR AROUND WELD AREA.
5. USED COPPER SLEEVES AS RECOMMENDED BY THE EXOTHERMIC WELD MANUFACTURED FOR THE WIRE TO BE WELDED.
6. USE THE APPROPRIATE WELD MOLDS FOR HORIZONTAL AND VERTICAL APPLICATION. THIS DETAIL ILLUSTRATES THE USE OF A HORIZONTAL WELD CONFIGURATION.

BURIED PIPE JOINT BONDING DETAIL

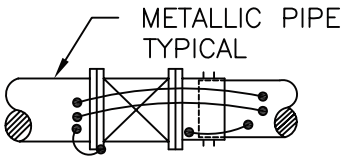

VALVE AND FLANGE COUPLING ADAPTOR

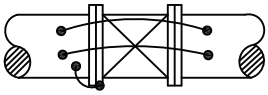

VALVE

SLEEVE–TYPE, OR VITAULIC–TYPE COUPLING

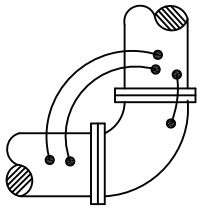

BEND, OR REDUCER

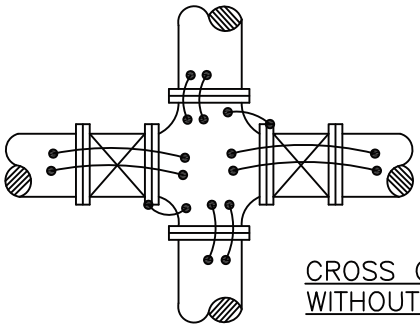

CROSS OR TEE, WITH OR WITHOUT VALVES

NOTES

1. BOND WIRE SHALL BE NO. 6 AWG STRANDED HMWPE WIRE INSULATION UNLESS OTHER WISE SPECIFIED.
2. ALL WIRE WELDS SHALL BE A MINIMUM OF 3-INCHES APART.
3. BOND WIRE SHALL LAY FLAT WITH SLACK AGAINST THE PIPE, OR FITTING WITHOUT BRIDGING OVER FLANGES, COUPLINGS OR JOINTS.
4. FOR PIPE DIAMETERS 20-INCHES OR LESS, TWO BOND CABLES ARE REQUIRED. FOR PIPE DIAMETERS LARGER THAN 20-INCHES, THREE BOND CABLES ARE REQUIRED.
5. DO NOT BOND ACROSS INSULATING FLANGES OR ELECTRICAL ISOLATION DEVICES.
6. REFER TO STANDARD PLAN 632 FOR DETAILS FOR CONTINUITY BONDING TO A VALVE.

APPROVED:

CITY ENGINEER

DATE: 10/01/11

CITY OF HUNTINGTON BEACH

DEPARTMENT OF PUBLIC WORKS

EXOTHERMIC WELD DETAIL AND BURIED PIPE JOINT BONDING DETAIL

STANDARD PLAN 630

CATHODIC TEST STATION BOX

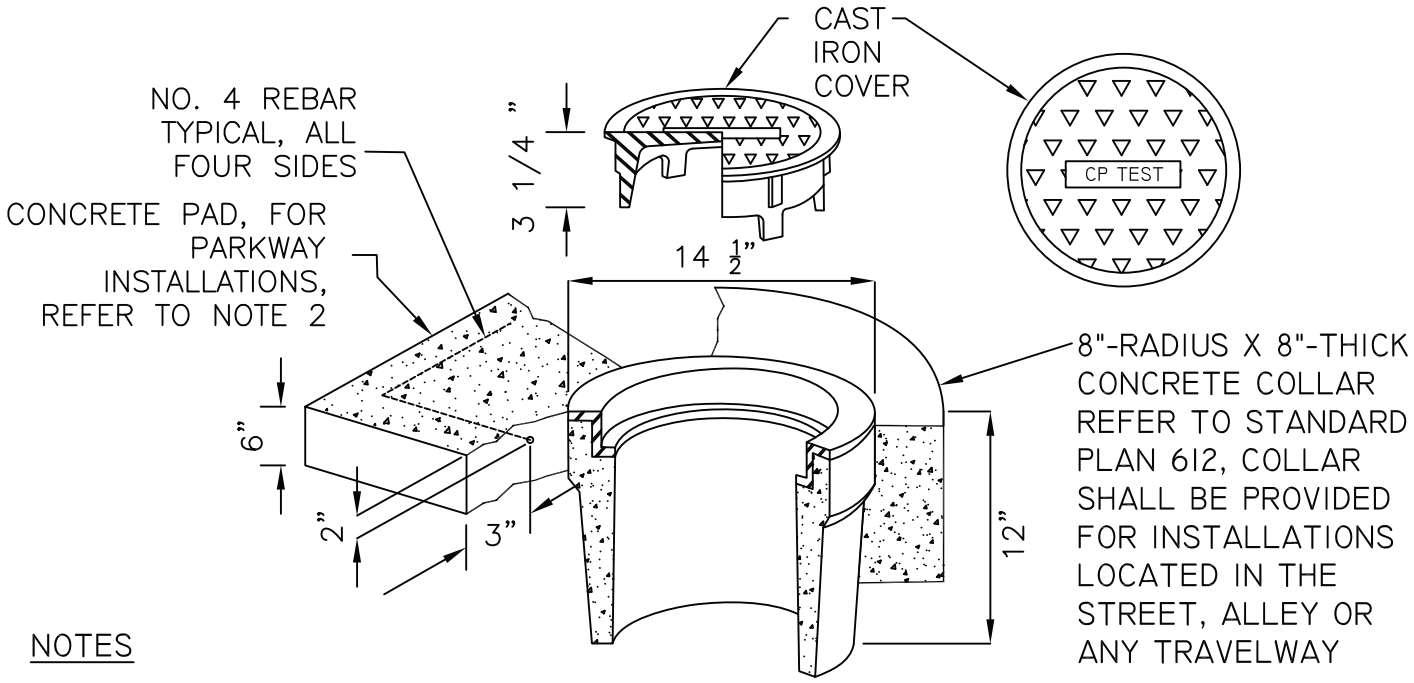

NOTES

1. TEST BOX IS TO BE LOCATED BEHIND THE CURB, OFF THE PAVED ROADWAY OR AS SHOWN ON THE APPROVED PLANS. DO NOT PLACE IN PARKING SPACES, DRIVEWAYS OR SIDEWALKS.
2. PROVIDE 24" X 24" X 6" THICK REINFORCED CONCRETE PAD AROUND TEST BOX AT UNPAVED SITES.
3. CATHODIC PROTECTION TEST BOX SHALL BE H-20 TRAFFIC RATED, CHRISTY G-5 OR EQUAL.
4. BODY WEIGHT SHALL BE 54 LB MINIMUM. COVER WEIGHT SHALL BE 12 LB MINIMUM.

RUBBER GASKET JOINT BONDING DETAIL

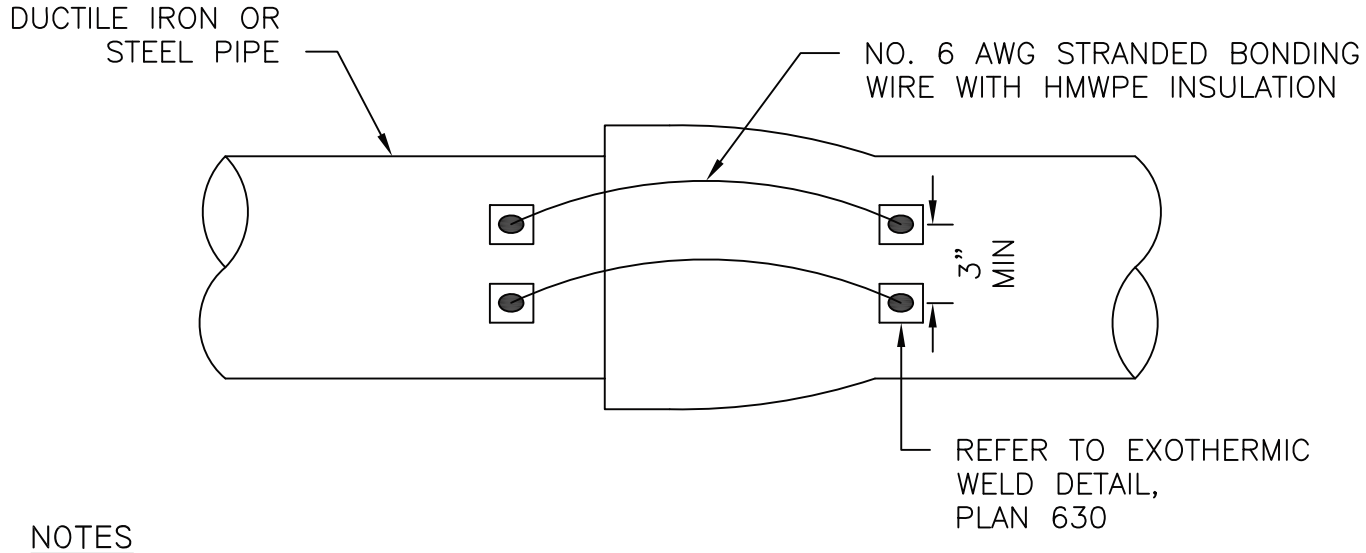

NOTES

1. BOND WIRE SHALL BE NO. 6 AWG STRANDED HMWPE WIRE INSULATION UNLESS OTHER WISE SPECIFIED.
2. ALL WIRE WELDS SHALL BE A MINIMUM OF 3-INCHES APART.
3. BOND WIRE SHALL LAY FLAT WITH SLACK AGAINST THE PIPE, OR FITTING WITHOUT BRIDGING OVER FLANGES COUPLINGS OR JOINTS.
4. DO NOT PLACE EXOTHERMIC WELD ON THE BELL OF THE PIPE.
5. A MINIMUM OF TWO BOND WIRES ARE REQUIRED FOR PIPE DIAMETER OF 20 INCHES OR LESS. FOR PIPE DIAMETERS LARGER THAN 20 INCHES THREE CABLES ARE REQUIRED.

APPROVED:

CITY ENGINEER

DATE: 10/01/11

CITY OF HUNTINGTON BEACH

DEPARTMENT OF PUBLIC WORKS

CATHODIC TEST STATION BOX AND RUBBER GASKET JOINT BONDING DETAIL

STANDARD PLAN 631

GATE VALVE BONDING DETAIL

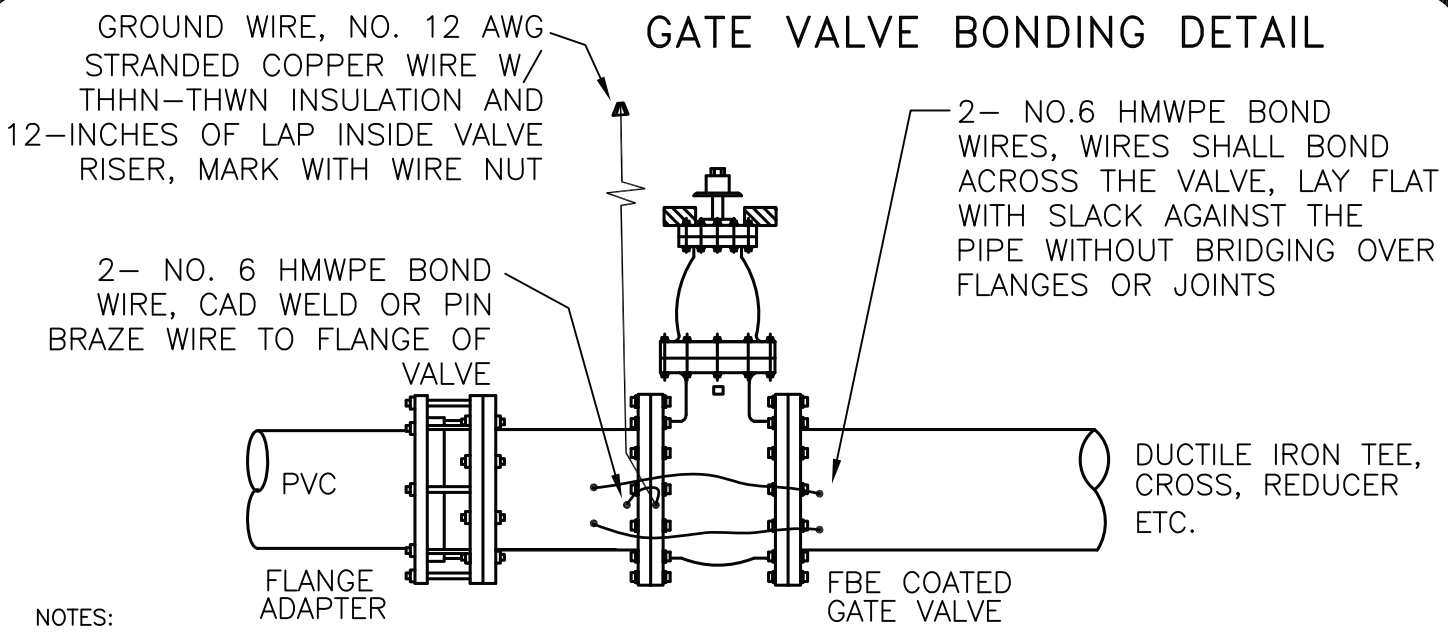

NOTES:

1. ALUMINO–THERMIC WELDS SHALL BE MINIMUM OF 3–INCHES APART.
2. APPLY NO–OX–ID "A SPECIAL WW" GREASE AND WRAP TO ALL BURIED, NON–EPOXY COATED SURFACES I.E. FLANGES, COUPLINGS, ETC.
3. CARE SHALL BE TAKEN TO INSURE THAT THE INTERIOR LINING OF THE VALVE OR THE GASKET SHALL NOT BE DAMAGED BY CAD WELDING OF BONDING WIRES. VALVES WITH DAMAGED LINING SHALL BE IMMEDIATELY REMOVED FROM THE CONSTRUCTION SITE.
4. REFER TO PLAN 636 FOR CATHODIC PROTECTION DETAILS FOR DUCTILE IRON FITTINGS.

HIGH POTENTIAL MAGNESIUM ANODES

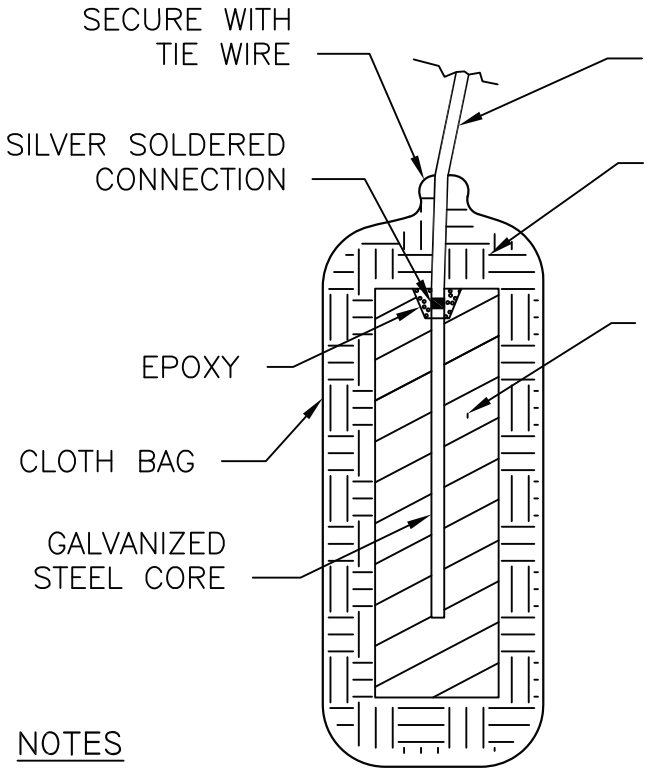

ANODE LEAD WIRE, NO. 12 AWG STRANDED COPPER WIRE WITH RED THHN–THWN INSULATION

BACKFILL COMPOSITION
75% GYPSUM
20% BENTONITE
5% SODIUM SULFATE

HIGH POTENTIAL CAST MAGNESIUM INGOT
INGOT SIZE: 17D3, 3.5" X 4" X 25"

CHEMICAL COMPOSITION PER ASTM B843

ELEMENT	CONTENT %
Al	0.01
Mn	0.50 TO 1.30
Cu	0.02 MAX
Ni	0.001 MAX
Fe	0.03 MAX
Si	0.05 MAX
OTHER	0.05 MAX TOTAL
Mg	REMAINDER

NOTES

1. ALL WIRE SHALL BE CASED IN SCHEDULE 40 PVC PER PLAN 633.
2. CONNECT THE PIPE LEAD WIRES TO SEPARATE TERMINALS IN THE ANODE TEST STATION.
3. DO NOT LIFT OR HANDLE THE ANODE WITH THE ANODE LEAD WIRE.

APPROVED:

CITY ENGINEER

DATE: 10/01/11

CITY OF HUNTINGTON BEACH

DEPARTMENT OF PUBLIC WORKS

GATE VALVE BONDING DETAIL & HIGH POTENTIAL MAGNESIUM ANODES

STANDARD PLAN 632

BURIED CABLE TRENCH

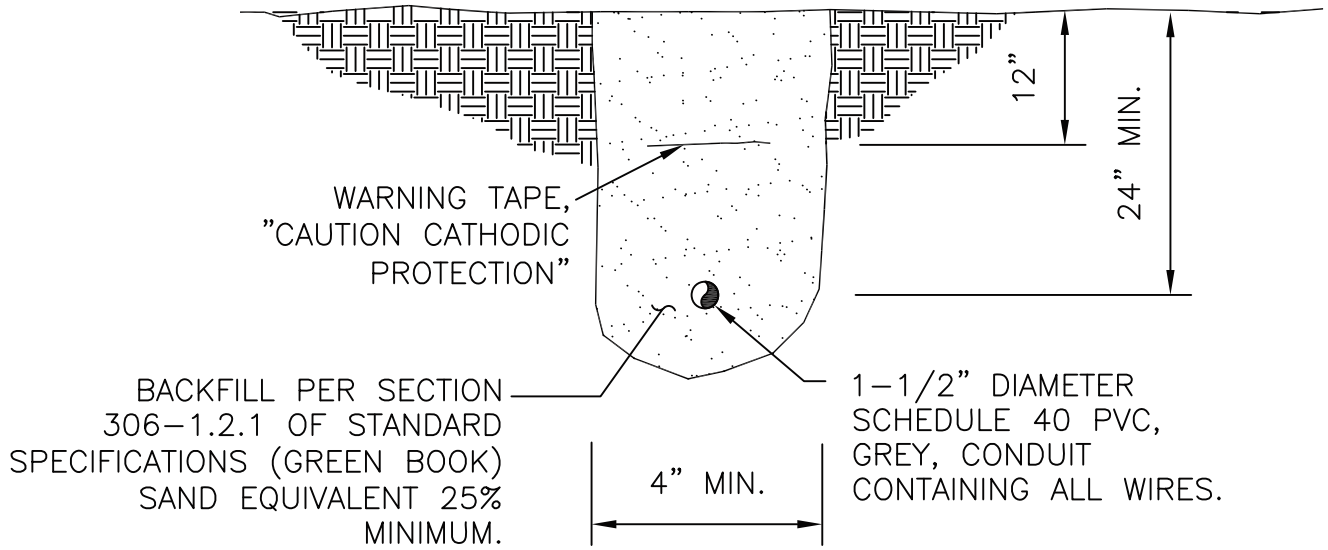

NOTES

1. ALL WIRE SHALL BE CASED IN SCHEDULE 40 PVC, GREY CONDUIT.
2. CONNECT THE PIPE LEAD WIRES TO SEPARATE TERMINALS IN THE ANODE TEST STATION.
3. PROVIDE PVC SWEEP 90° BEND AT THE TEST STATION END.

ZINC ANODE

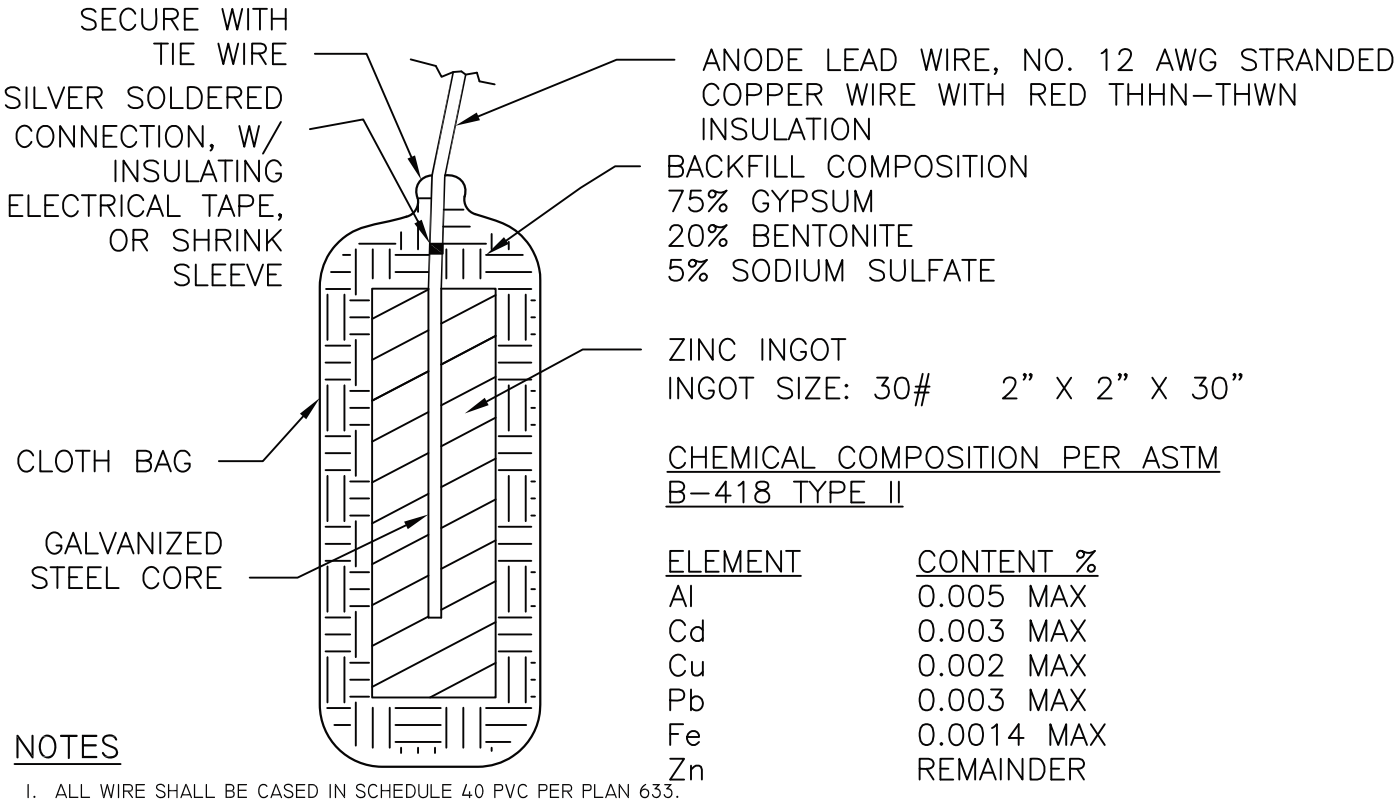

CHEMICAL COMPOSITION PER ASTM B-418 TYPE II

ELEMENT	CONTENT %
Al	0.005 MAX
Cd	0.003 MAX
Cu	0.002 MAX
Pb	0.003 MAX
Fe	0.0014 MAX
Zn	REMAINDER

NOTES

1. ALL WIRE SHALL BE CASED IN SCHEDULE 40 PVC PER PLAN 633.
2. CONNECT THE PIPE LEAD WIRES TO SEPARATE TERMINALS IN THE ANODE TEST STATION.
3. DO NOT LIFT OR HANDLE THE ANODE WITH THE ANODE LEAD WIRE

APPROVED:

CITY ENGINEER

DATE: 10/01/11

CITY OF HUNTINGTON BEACH

DEPARTMENT OF PUBLIC WORKS

CABLE TRENCH & ZINC ANDOE

STANDARD PLAN

633

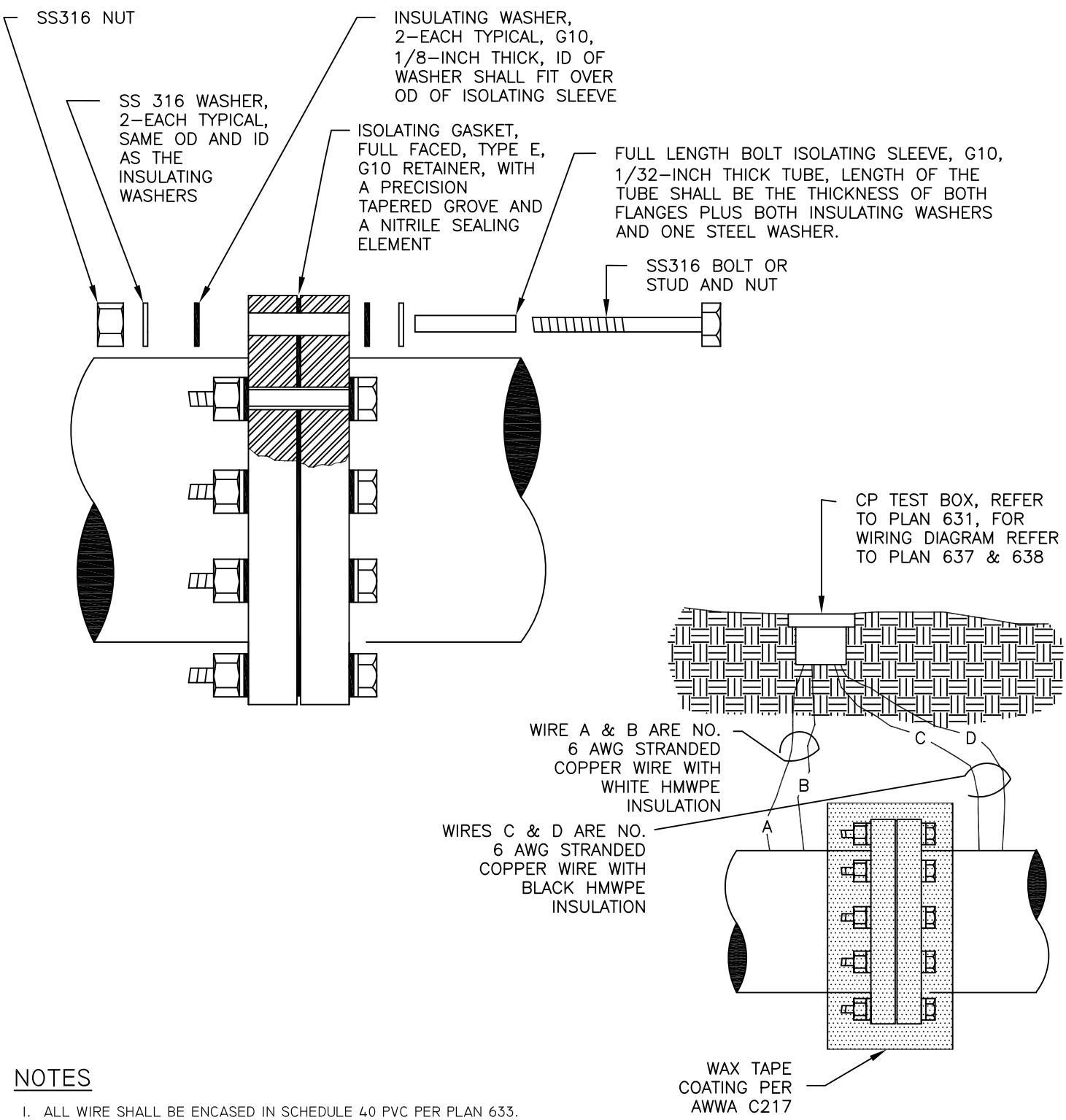

NOTES

1. ALL WIRE SHALL BE ENCASED IN SCHEDULE 40 PVC PER PLAN 633.
2. CONNECT THE PIPE LEAD WIRES TO SEPARATE TERMINALS IN THE TEST STATION.
3. DO NOT COAT OR SPRAY INSULATING COMPONENTS WITH GREASE.
4. COAT FLANGES AND HARDWARE WITH WAX TAPE IN ACCORDANCE WITH AWWA C217, EXTEND THE WAX TAPE A MINIMUM OF 6 INCHES ONTO PIPE CYLINDER IN EACH DIRECTION. THE COATING SHALL BE 70 MIL MINIMUM OVER SMOOTH SURFACES AND 140 MIL MINIMUM OVER IRREGULAR OR SHARP SURFACES.
5. ALL WIRE SHALL BE PERPENDICULAR TO THE MAIN AND TERMINATE AT THE CP TEST BOX.

APPROVED:

CITY ENGINEER

DATE: 10/01/11

CITY OF HUNTINGTON BEACH

DEPARTMENT OF PUBLIC WORKS

BURIED INSULATING FLANGE DETAIL AND TEST STATION

STANDARD PLAN

634

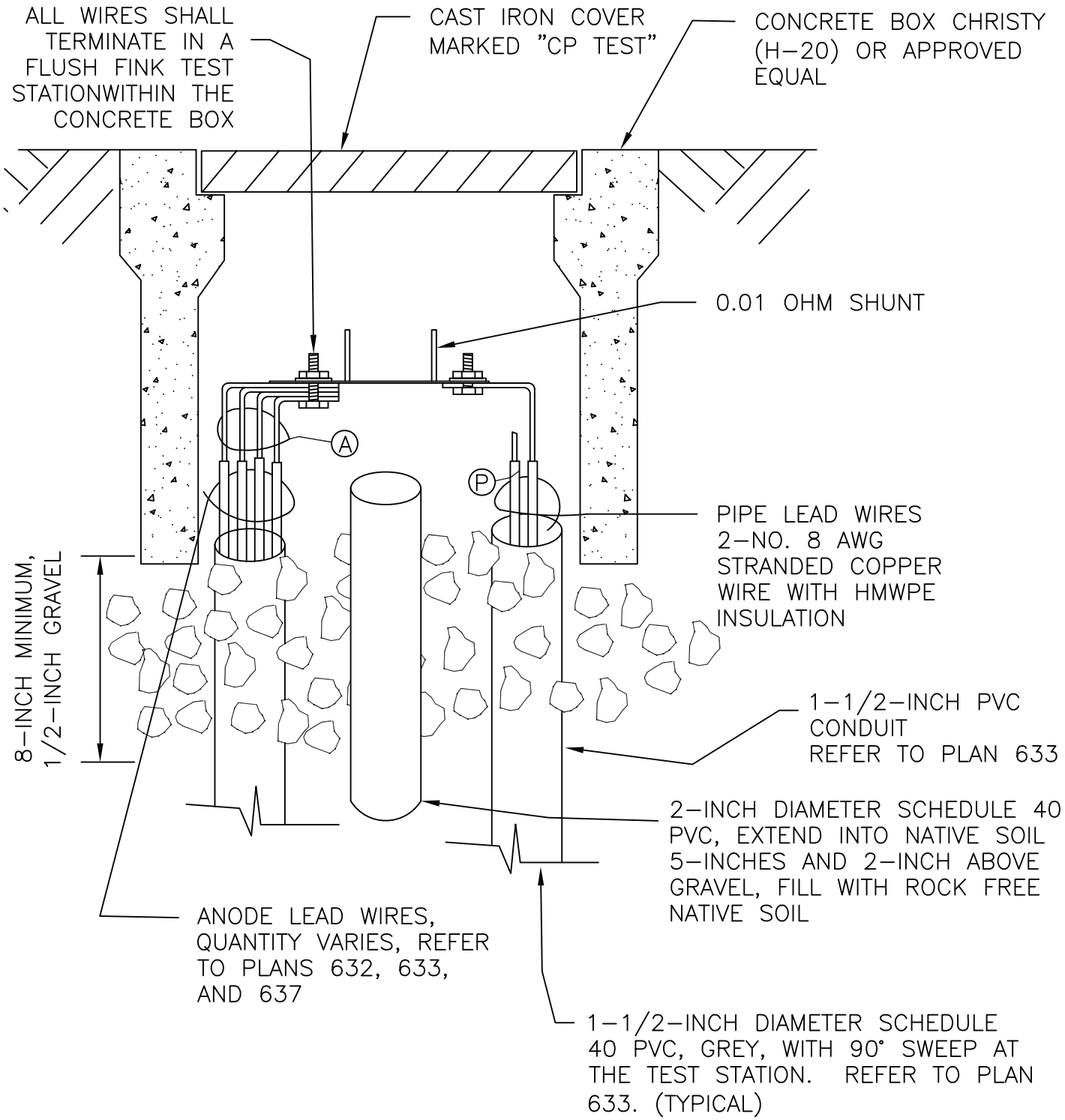

NOTES

1. SACRIFICIAL ANODE TEST STATION IS NOT REQUIRED FOR STAND ALONE FITTINGS AND APPURTENANCES.
2. ALL WIRES SHALL BE ENCASED IN SCHEDULE 40 PVC PER PLAN 633.
3. ALL WIRES SHALL BE ABLE TO EXTEND 18-INCHES ABOVE GRADE. WIRE SHALL BE BUNDLED IN THE TEST STATION BOX.

APPROVED:

CITY ENGINEER

DATE: 10/01/11

CITY OF HUNTINGTON BEACH

DEPARTMENT OF PUBLIC WORKS

SACRIFICIAL ANODE TEST STATION WIRING DIAGRAM

STANDARD PLAN 635

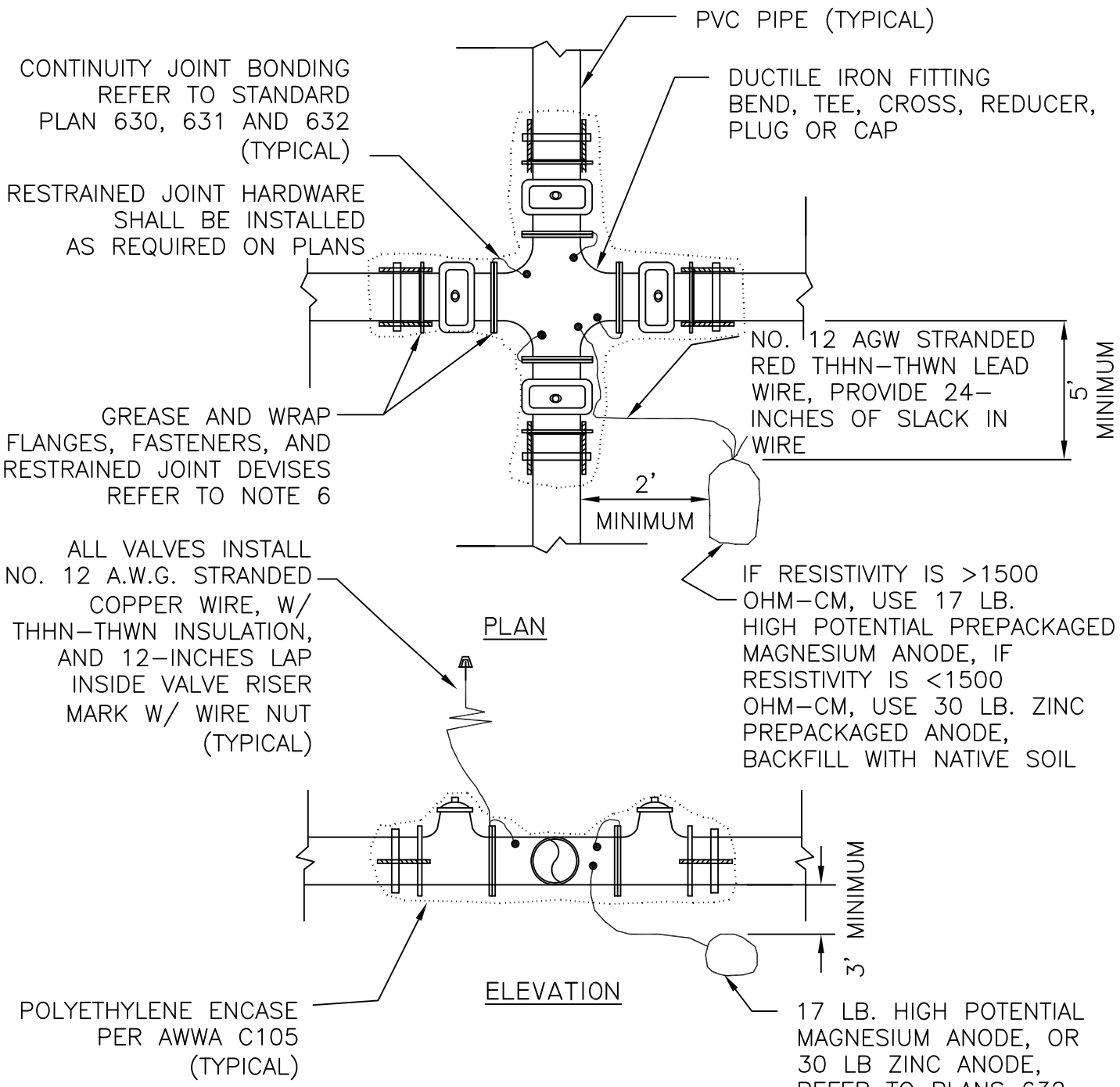

NOTES

1. CP TEST STATION IS NOT REQUIRED FOR STAND ALONE FITTINGS AND APPURTENANCES.
2. PROVIDE CONTINUITY JOINT BONDING FOR ALL CONTINUOUS SECTIONS OF DUCTILE IRON FITTINGS AND APPURTENANCES.
3. EXOTHERMIC WELD ANODE LEAD WIRE TO THE FITTING, PER STANDARD PLAN 630.
4. COVER ALL EXOTHERMIC WELDS WITH ROYBOND 747 AND A ROYSTON HANDY CAP.
5. ALL NUTS, BOLTS, AND WASHERS SHALL BE GRADE 316 STAINLESS STEEL.
6. APPLY NO-OX-ID "A SPECIAL WW" GREASE AND PROTECTIVE WRAP ON ALL BURIED FITTINGS.
7. FITTINGS, VALVES, AND RESTRAINED JOINT DEVISES, SHALL BE ENCASED IN POLYETHYLENE PER AWWA C105.
8. EXOTHERMIC WELDS SHALL NOT DAMAGE LININGS OF PIPE, FITTINGS, OR APPURTENANCES. PRODUCT WITH DAMAGED LINING SHALL BE REMOVED FROM THE JOB SITE.

APPROVED:

CITY ENGINEER

DATE: 10/01/11

CITY OF HUNTINGTON BEACH

DEPARTMENT OF PUBLIC WORKS

CATHODIC PROTECTION FOR DUCTILE IRON FITTINGS (6–12–INCH IN DIAMETER)

STANDARD PLAN 636

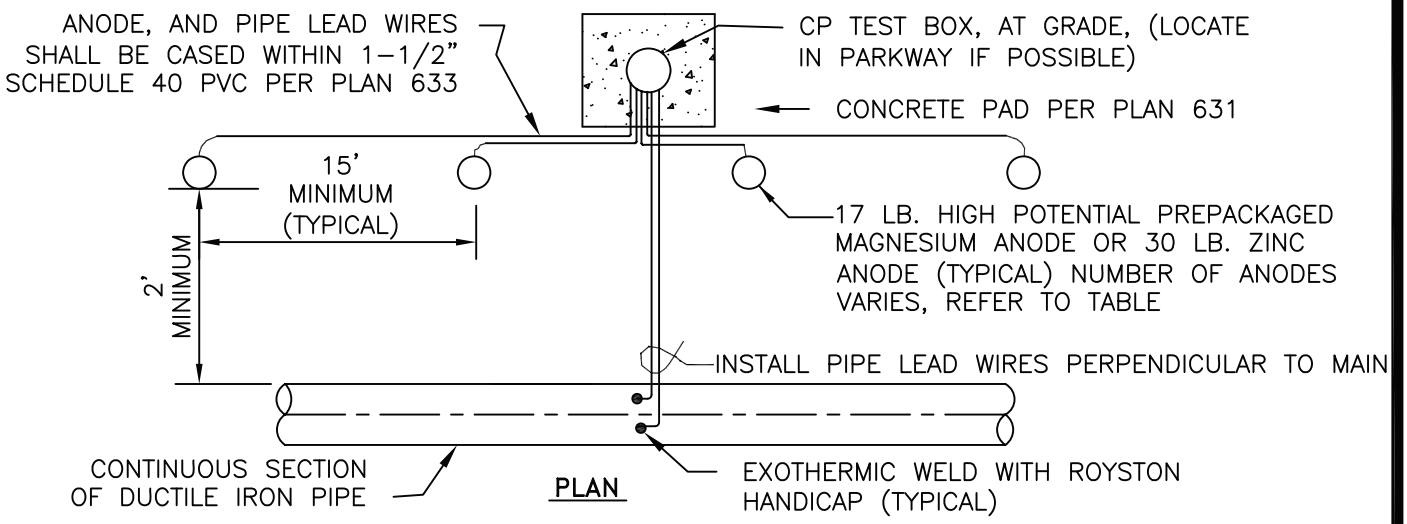

PLAN

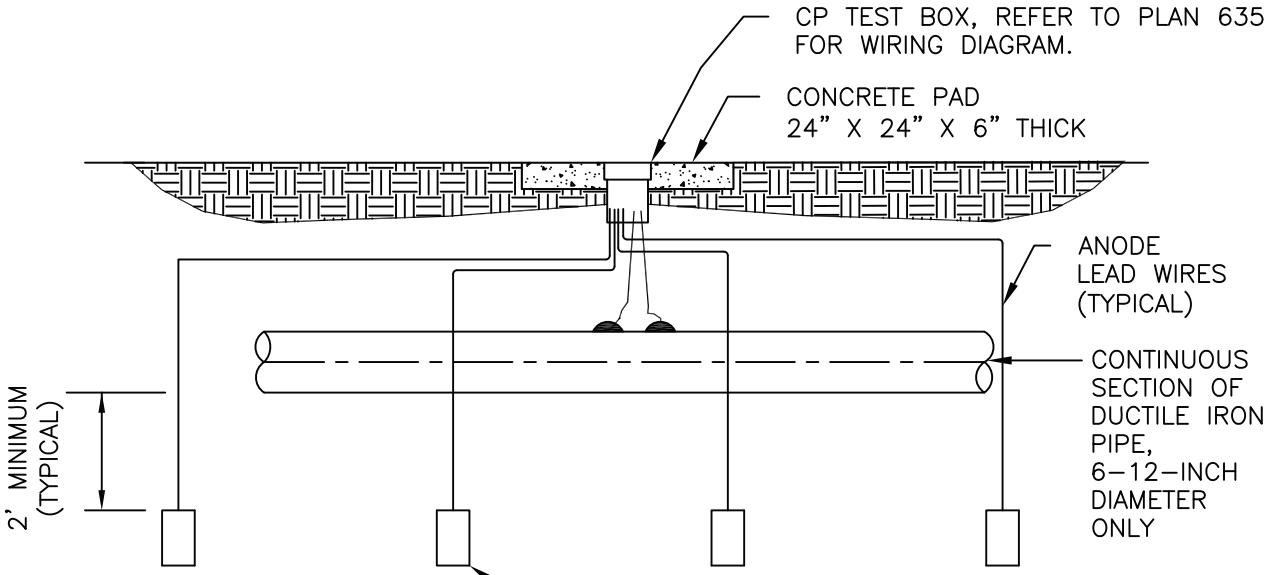

ELEVATION

LENGTH OF PIPE 6-12-INCH PIPE	NUMBER OF Mg ANODES OR Zn ANODES
20-50 FEET	USE PLAN 636
51-100 FEET	2
101-150 FEET	3
151-200 FEET	4
201-250 FEET	5

NOTES

1. CP TEST STATION IS NOT REQUIRED FOR STAND ALONE FITTINGS AND APPURTENANCES OR FOR PIPE LENGTHS LESS THAN 50 FEET. REFER TO PLAN 636.
2. PROVIDE CONTINUITY JOINT BONDING FOR ALL CONTINUOUS SECTIONS OF DUCTILE IRON PIPE, FITTINGS, AND APPURTENANCES. REFER TO PLANS 630 AND 631
3. ALL WIRE SHALL BE ENCASED IN SCHEDULE 40 PVC PER PLAN 633.
4. COVER ALL EXOTHERMIC WELDS WITH ROYBOND 747 AND A ROYSTON HANDY CAP.
5. ALL NUTS, BOLTS, AND WASHERS SHALL BE GRADE 316 STAINLESS STEEL.
6. APPLY NO-OX-ID "A SPECIAL WW" GREASE AND PROTECTIVE WRAP ON ALL BURIED FITTINGS.
7. FITTINGS, VALVES, AND RESTRAINED JOINT DEVICES, SHALL BE ENCASED IN POLYETHYLENE PER AWWA C105.
8. FOR PIPE SIZES GREATER THAN 12-INCH DIAMETER, OR LENGTHS GREATER THAN 250 FT THE CATHODIC PROTECTION SYSTEM SHALL BE CUSTOM DESIGNED.

APPROVED:

CITY ENGINEER

DATE: 10/01/11

CITY OF HUNTINGTON BEACH

DEPARTMENT OF PUBLIC WORKS

CATHODIC PROTECTION FOR DUCTILE IRON, 6-12-INCH PIPE WITH ANODE TEST STATION

STANDARD PLAN 637

BURIED INSULATING FLANGE TEST STATION WIRING DIAGRAM

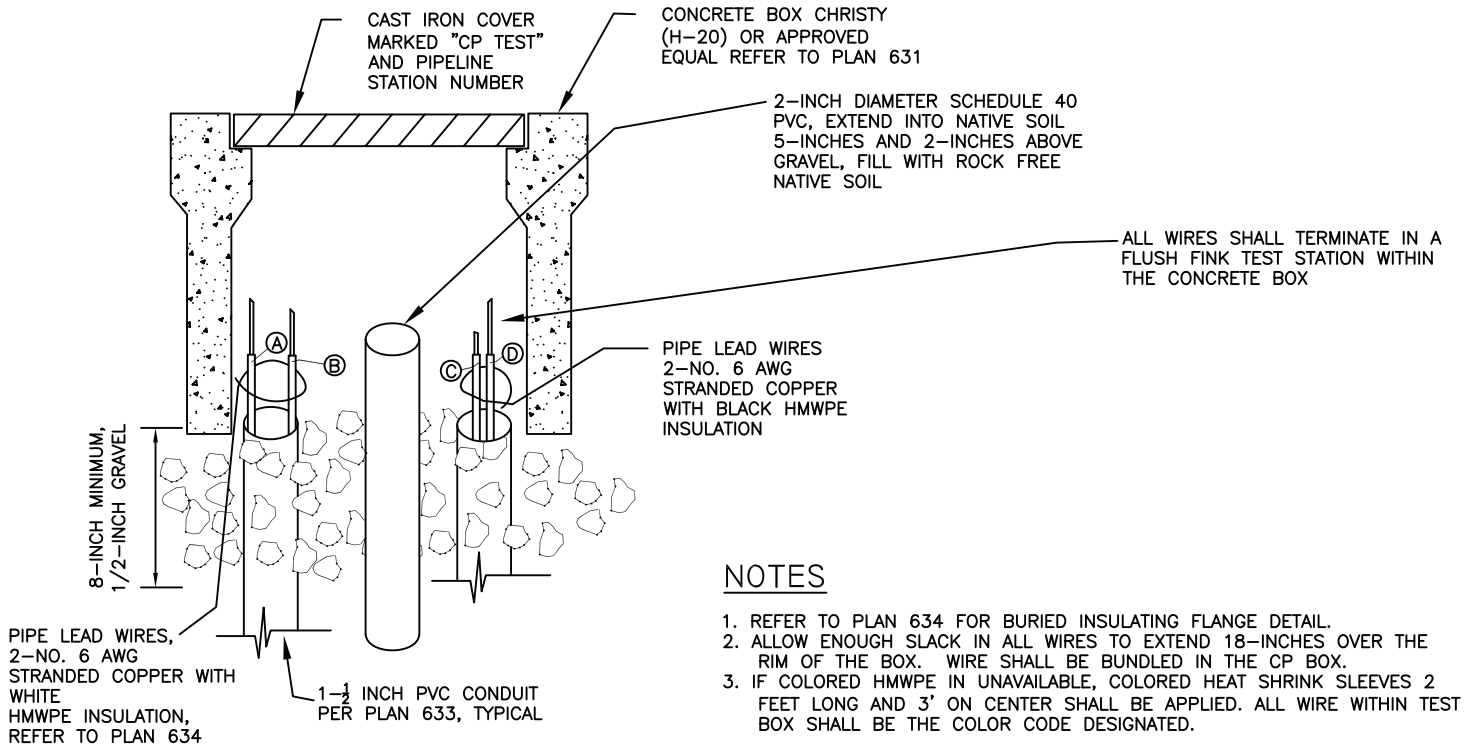

NOTES

1. REFER TO PLAN 634 FOR BURIED INSULATING FLANGE DETAIL.
2. ALLOW ENOUGH SLACK IN ALL WIRES TO EXTEND 18–INCHES OVER THE RIM OF THE BOX. WIRE SHALL BE BUNDLED IN THE CP BOX.
3. IF COLORED HMWPE IN UNAVAILABLE, COLORED HEAT SHRINK SLEEVES 2 FEET LONG AND 3' ON CENTER SHALL BE APPLIED. ALL WIRE WITHIN TEST BOX SHALL BE THE COLOR CODE DESIGNATED.

TWO WIRE TEST STATION

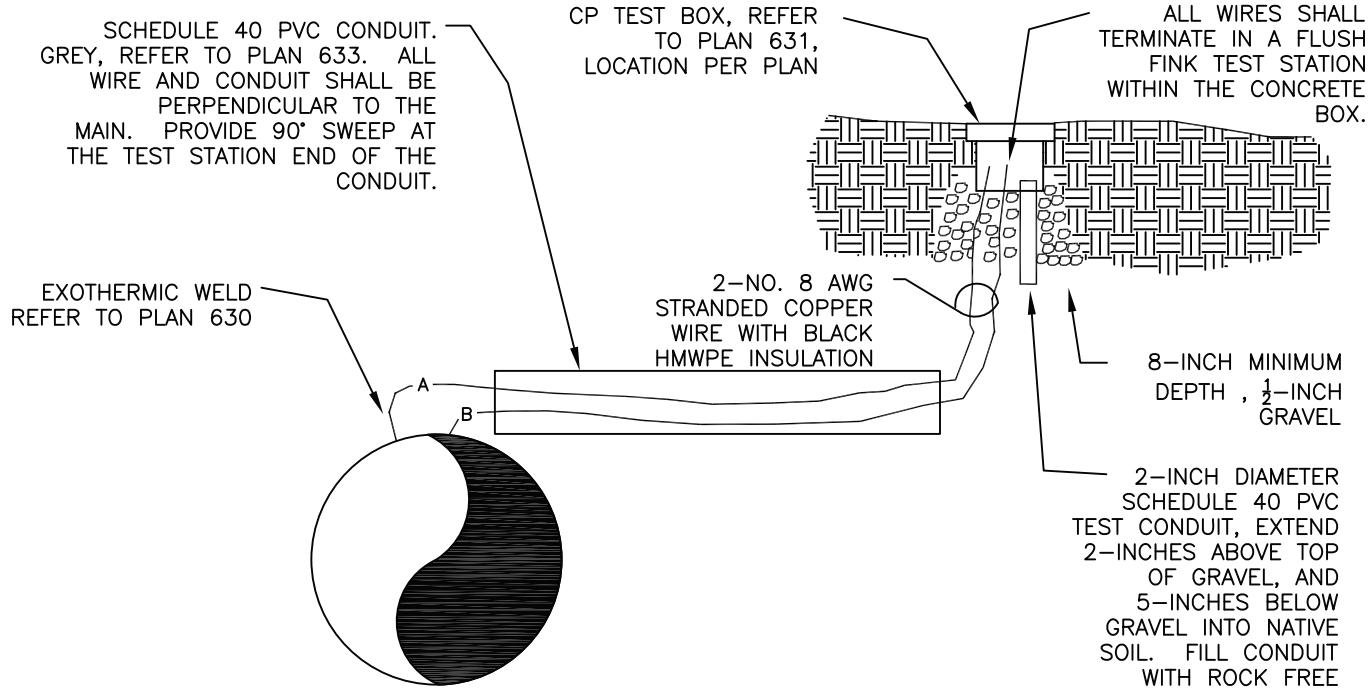

NOTES

1. PROVIDE WIRE SLACK TO EXTEND EACH WIRE 18–INCHES ABOVE THE RIM OF THE BOX.
2. PROVIDE PVC 90° SWEEP AT TEST STATION.

APPROVED:

CITY ENGINEER

DATE: 10/01/11

CITY OF HUNTINGTON BEACH

DEPARTMENT OF PUBLIC WORKS

BURIED INSULATING FLANGE TEST STATION WIRING DIAGRAM & TWO WIRE TEST STATION

STANDARD PLAN 638