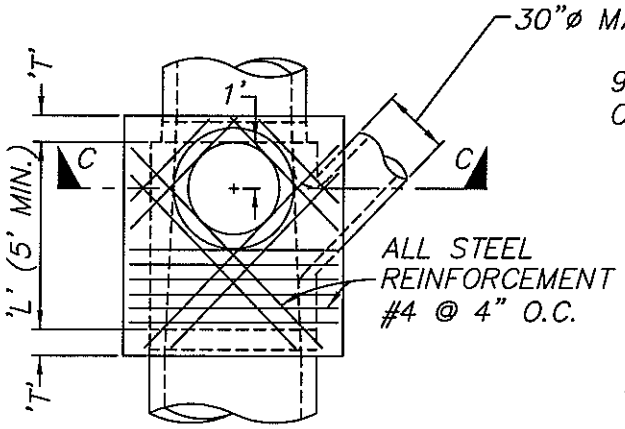

DETAIL N

(SHAFT NOT SHOWN)
SEE GENERAL NOTE 3.

	MAX.	MIN.
FOR PAVED STREETS	11"	8 1/2"
FOR UNPAVED STREETS	16"	15"

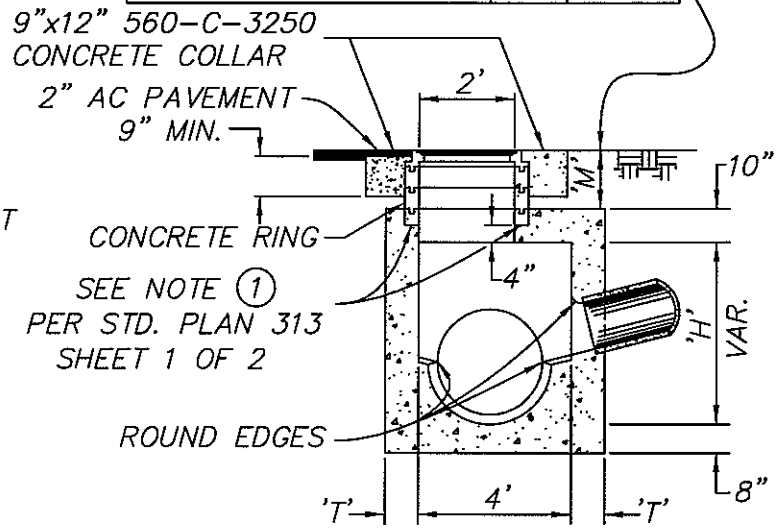

SECTION C-C

GENERAL NOTES:

1. HEIGHT-'H' (IN SECTION A-A AND SECTION B-B) SHALL BE NOT LESS THAN 4'-0", BUT MAY BE INCREASED AT OPTION OF THE ENGINEER PROVIDED THAT THE VALUE OF 'M' SHALL BE NOT LESS THAN THE MINIMUM SPECIFIED AND THAT THE REDUCER SHALL BE USED FOR 'H' (IN SECTION C-C). SEE NOTE 4.
2. LENGTH-'L' MAY BE INCREASED A MAX. OF ONE FOOT AT EACH END TO MEET PIPE ENDS. CONTINUE #4 AT 4" O.C.
3. SHAFT SHALL BE CONSTRUCTED PER SECTION C-C AND DETAIL N WHEN DEPTH 'M' FROM STREET GRADE TO TOP OF BOX IS LESS THAN 2'-10.5" FOR PAVED STREETS OR 3'-6" FOR UNPAVED STREETS.
4. DEPTH-'M' MAY BE REDUCED TO A MINIMUM 6" WHEN LARGER VALUES OF 'M' WOULD REDUCE 'H' (IN SECTION C-C) TO 3'-6" OR LESS.
5. 'T' SHALL BE 8" FOR VALUES OF 'H' LESS THAN OR EQUAL TO 8'. 'T' SHALL BE 10". FOR VALUES OF 'H' GREATER THAN 8'.
6. STEPS SHALL BE STEEL REINFORCED CO-POLYMER POLYPROPYLENE M.H. STEPS TYPE PS2-PFS.
7. REINFORCED STEEL SHALL BE #4 BARS, DEFORMED, STRAIGHT BARS 1.5" CLEAR FROM FACE OF CONCRETE.
8. STATIONS OF MANHOLES SHOWN ON IMPROVEMENT PLAN APPLY AT CENTER LINE OF SHAFT.
9. FLOOR OF MANHOLE SHALL BE STEEL-TROWELED.
10. RINGS, REDUCER, AND PIPE FOR ACCESS SHAFT SHALL BE SEATED IN 1:2 MORTAR AND NEATLY POINTED OR WIPED INSIDE SHAFT.
11. LEDGE SHALL BE SLOPED AT 2" PER FOOT.
12. USE JUNCTION STRUCTURE TYPE "D" FOR OUTLET PIPE DIAMETER OF 42" OR LESS, AND INLET DIAMETER OF 30" OR LESS.

APPROVED:

CITY ENGINEER

REVISION DATE: MAY 2008

CITY OF HUNTINGTON BEACH

DEPARTMENT OF PUBLIC WORKS

JUNCTION STRUCTURE - TYPE "D"

STANDARD PLAN 313

2 of 2