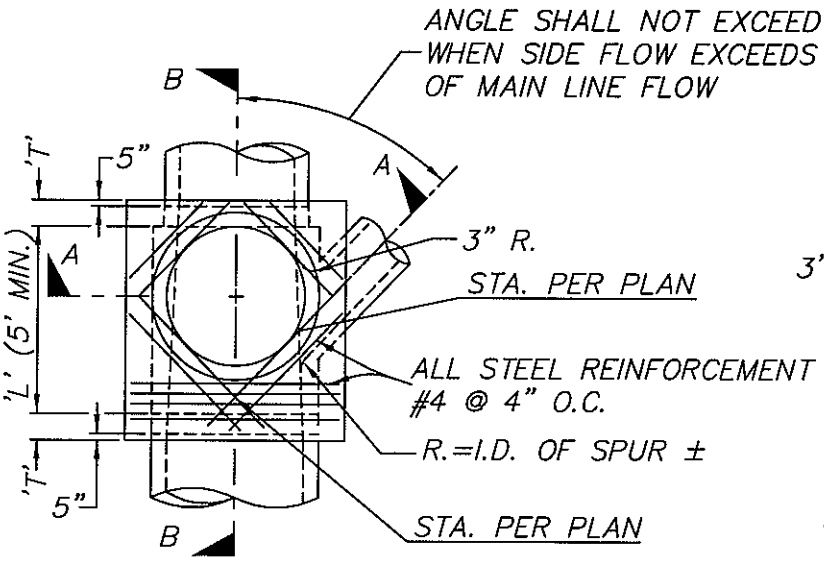

PLAN

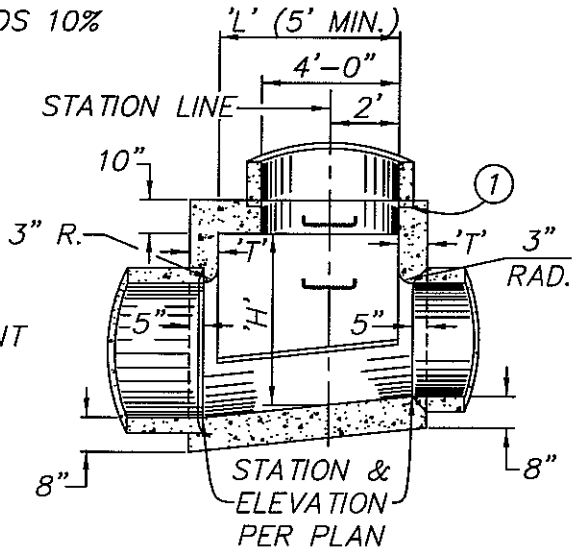

SECTION B-B

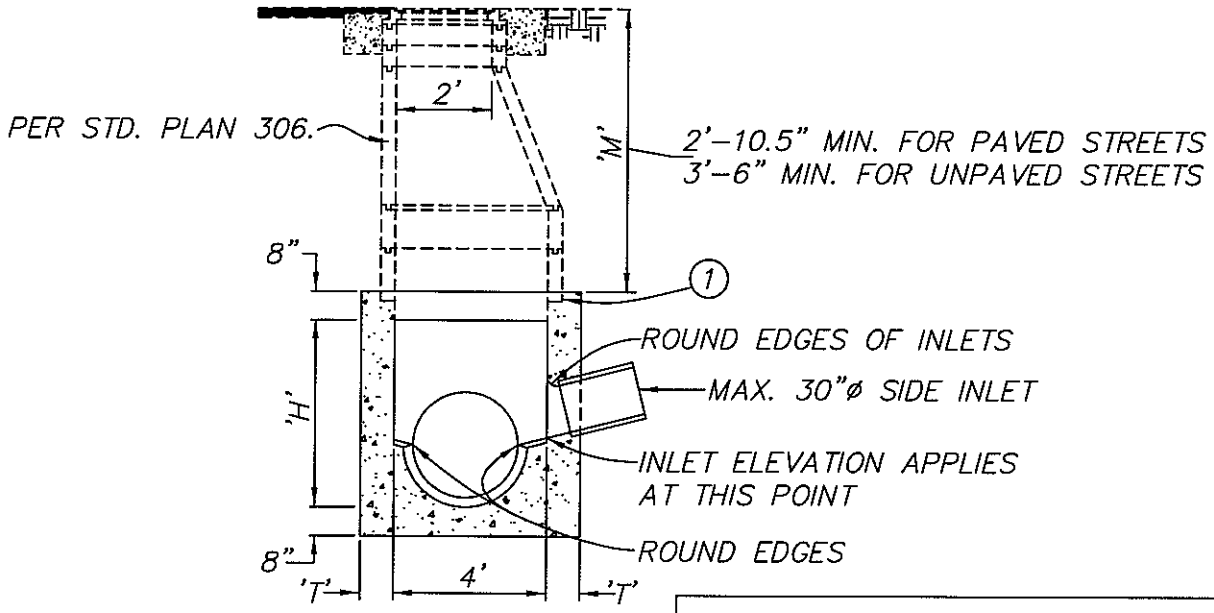

SECTION A-A

REFER TO STD. PLAN 313, SHEET 2 of 2 FOR GENERAL NOTES

NOTE:

1. 2" DEEP SEAT TO CORRESPOND TO MANHOLE SHAFT, GROUT BETWEEN SHAFT AND SEAL.

APPROVED:

CITY ENGINEER

REVISION DATE: MAY 2008

CITY OF HUNTINGTON BEACH

DEPARTMENT OF PUBLIC WORKS

JUNCTION STRUCTURE – TYPE "D"

STANDARD PLAN 313

1 of 2