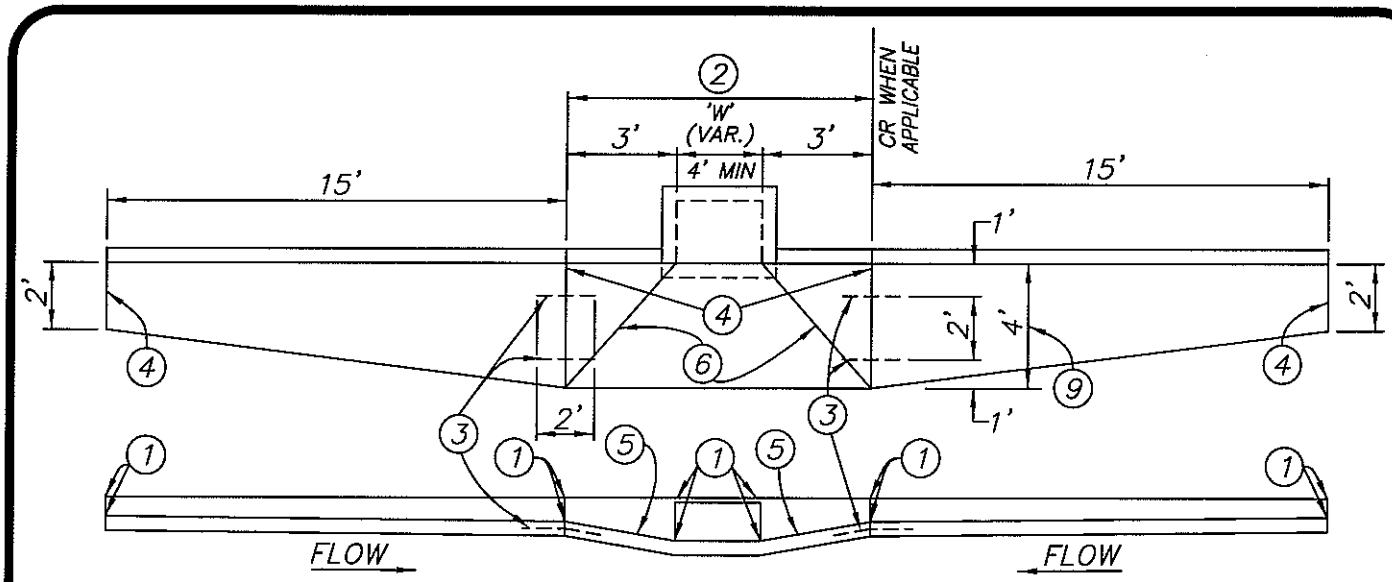

LOCAL DEPRESSION, SUMP COND.

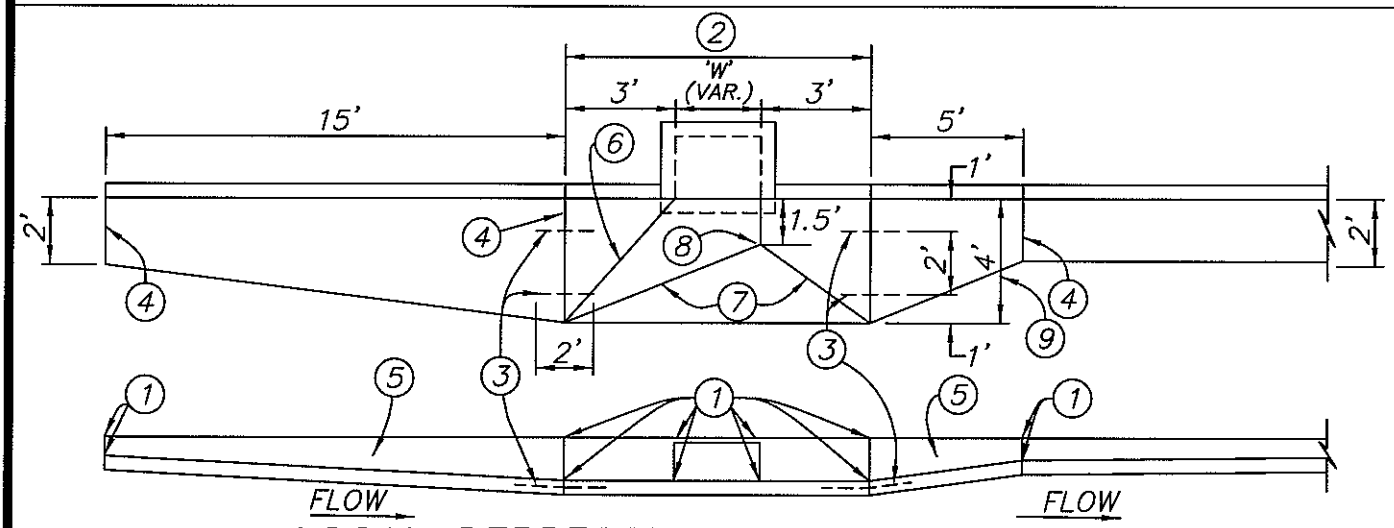

LOCAL DEPRESSION, INTERCEPT COND.

(FLOW-BY)

NOTES:

1. INDICATE TOP OF CURB AND FLOW LINE ELEVATIONS ON PLANS.
2. SEE STD. PLAN 301 FOR CATCH BASIN DETAILS.
3. INSTALL 2 – 1/2" DIA. SMOOTH BARS, 2' LONG, PER TYPICAL DIMENSIONS ABOVE.
4. PROVIDE WEAKENED PLANE OR QUICK JOINT.
5. CURB HEIGHT VARIES.
6. STRAIGHT GRADE FLOW LINE.
7. STRAIGHT GRADE RIDGE.
8. ELEVATION = FL ELEVATION + 2".
9. REDUCE TO 2' UPON APPROVAL OF THE CITY ENGINEER WHERE BIKE LANES ARE PRESENT.

APPROVED:

CITY ENGINEER

REVISION DATE: May 2008

CITY OF HUNTINGTON BEACH

DEPARTMENT OF PUBLIC WORKS

APRON TRANSITION – CATCH BASIN

STANDARD PLAN 302

1 of 1