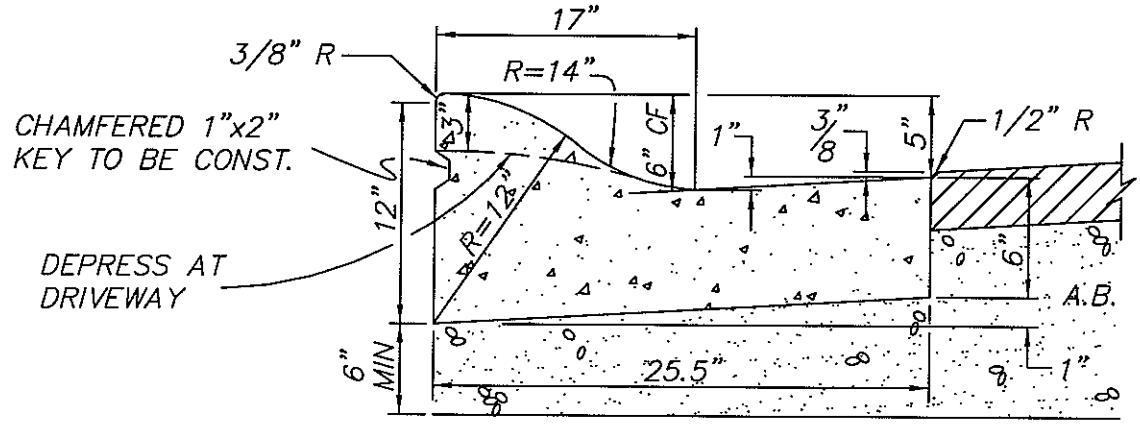

TYP. CONC. ROLLED CURB DETAIL 6" CF

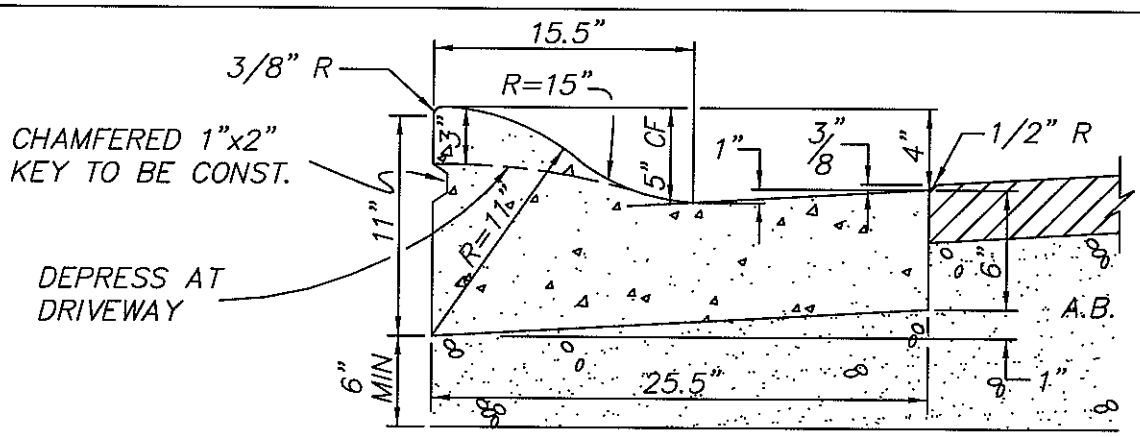

TYP. CONC. ROLLED CURB DETAIL 5" CF

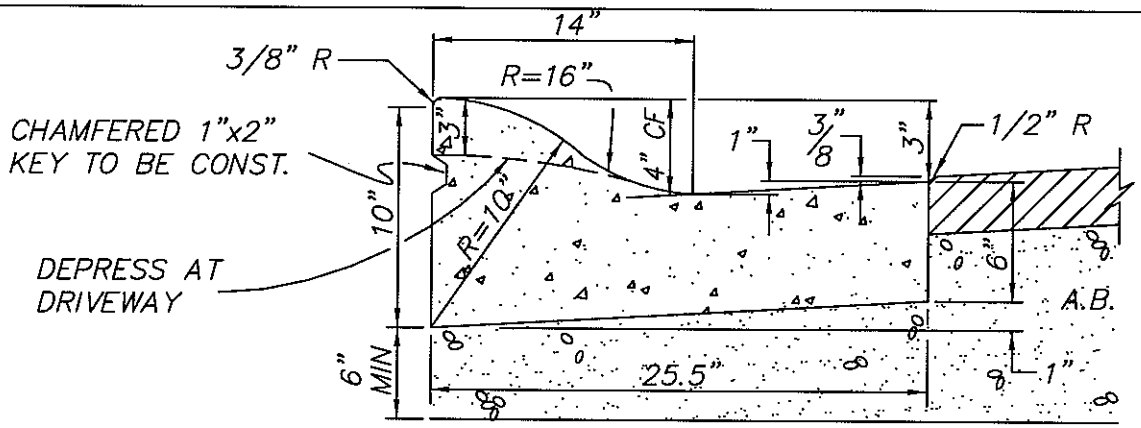

TYP. CONC. ROLLED CURB DETAIL 4" CF

GENERAL NOTES:

1. SPECIAL PERMISSION FROM THE CITY ENGINEER IS REQUIRED IN ORDER TO USE THIS STANDARD.

APPROVED:

CITY ENGINEER

REVISION DATE: May 2008

CITY OF HUNTINGTON BEACH

DEPARTMENT OF PUBLIC WORKS

PRIVATE STREET–
ROLLED CURB

STANDARD PLAN
216
1 of 1