					CURVE 1							CURVE 2				
'R/W'	1/2 'R/W'	1/2 'P'	'PK'	'D'	'△1'	CURB			R/W			'△2'	CURB		R/W	
						'R'	'L'	'T'	'R'	'L'	'T'		'R'	'L'	'R'	'L'
60'	30'	22'	8'	57.24'	34° 55' 04"	60'	36.57'	18.87'	52'	31.69'	16.35'	249° 50' 08"	40'	174.42'	48'	209.30'
54'	27'	20'	7'	60'	36° 52' 12"	60'	38.61'	20.00'	53'	34.11'	17.67'	253° 44' 24"	40'	177.14'	47'	208.14'
52'	26'	20'	6'	60'	36° 52' 12"	60'	38.61'	20.00'	54'	34.75'	18.00'	253° 44' 24"	40'	177.14'	46'	203.72'
44'	22'	16'	6'	64.99'	40° 32' 03"	60'	42.45'	22.16'	54'	38.20'	19.94'	261° 04' 06"	40'	182.26'	46'	209.60'

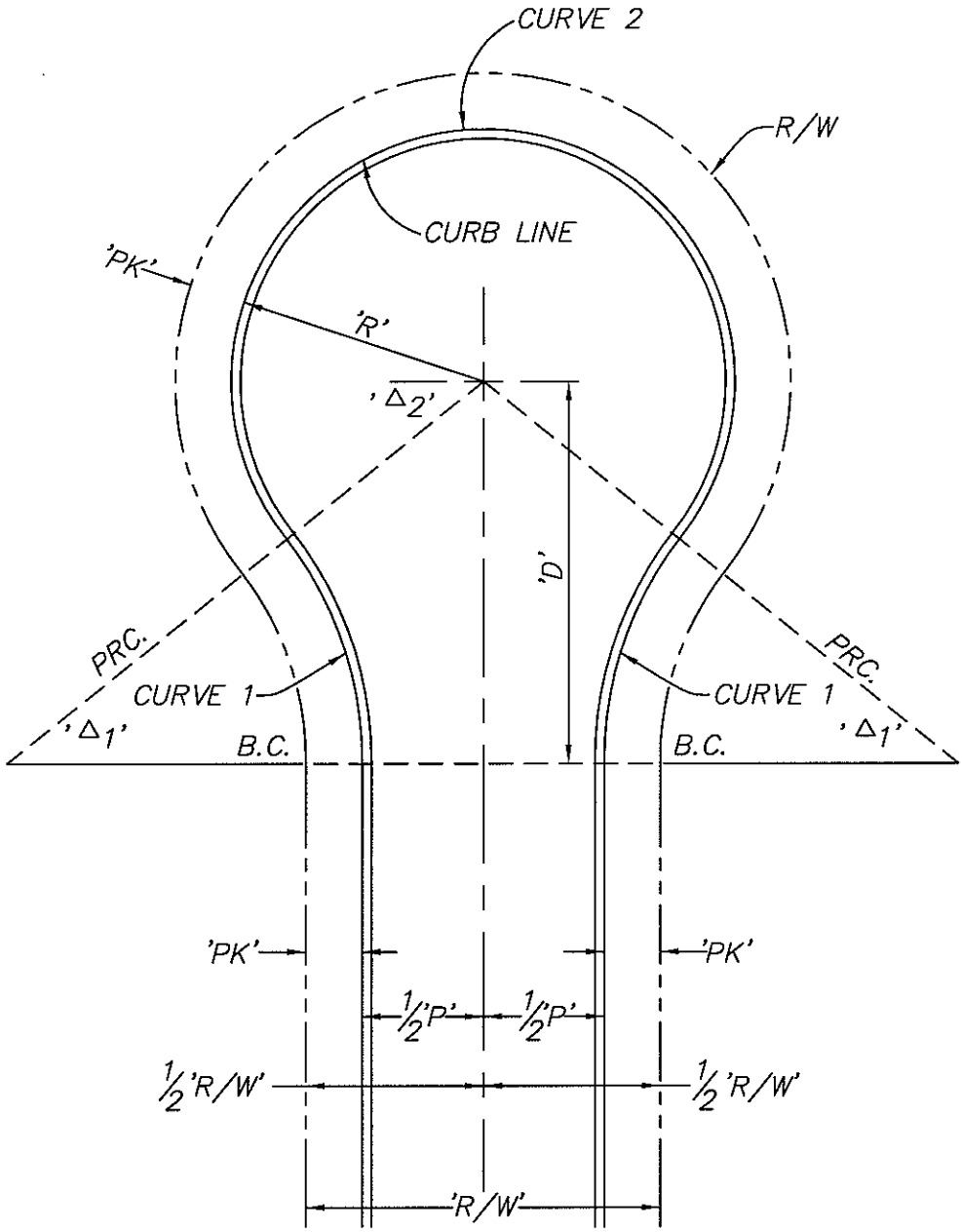

APPROVED:

CITY ENGINEER

REVISION DATE: March 21, 1994

CITY OF HUNTINGTON BEACH

DEPARTMENT OF PUBLIC WORKS

CUL-DE-SAC

STANDARD PLAN 106

1 of 1