CONDITIONS

THIS TYPE V CONSTRUCTION TEMPLATE IS APPLICABLE TO SINGLE FAMILY STORY ONE AND TWO FAMILY DWELLINGS.

FOR ADDITIONS OVER 400 SQUARE FEET, A SEPARATE GRADING AND DRAINAGE PLAN AND PERMIT IS REQUIRED BY THE PUBLIC WORKS DEPARTMENT.

FOR ADDITIONS 500 SQUARE FEET OR MORE, A SEPARATE SOILS REPORT SHALL BE REQUIRED TO BE SUBMITTED TO THE BUILDING DIVISION AT THE TIME OF BUILDING PLAN CHECK SUBMITTAL.

ALL CONSTRUCTION IS APPLICABLE TO THE 2013 CALIFORNIA RESIDENTIAL CODE (CRC) AS AMENDED BY THE CITY OF HUNTINGTON BEACH. THIS TEMPLATE IS NOT APPLICABLE TO NEW ONE AND TWO FAMILY DWELLINGS.

ANY STRUCTURAL ELEMENTS THAT EXCEED THE LIMITATIONS OF SECTION R301 OR NOT CONFORMING TO THE CRC REQUIREMENTS WILL REQUIRE AN ENGINEERED DESIGN BY A REGISTERED DESIGN PROFESSIONAL OR LICENSED ARCHITECT. COMBINED ROOF AND CEILING DEAD LOADS ARE LIMITED TO 15 POUNDS PER SQUARE FOOT.

FOR CONSTRUCTION LOCATED WITHIN THE FLOOD PLAIN OVERLAY (FP), BLUFF TOP LOTS, LOT SLOPES GREATER THAN 2:1, ANY AREA WITH A HISTORY OF SLOPE FAILURE OR ADDITIONS LOCATED WITHIN SPECIFIC FAULT ZONES SPECIFIED BY THE PLANNING DIVISION, AN REGISTERED DESIGN PROFESSIONAL MAY BE REQUIRED.

FOR RESIDENTIAL ADDITIONS USING THIS HANDOUT, ADDITIONAL PLAN PREPARATION IS REQUIRED. AT A MINIMUM, YOUR PLAN SET SHALL INCLUDE A SITE SPECIFIC PLOT PLAN, JOB SPECIFIC FLOOR PLAN, A MINIMUM OF TWO (2) ELEVATIONS, APPLICABLE CROSS-SECTIONS AND REFERENCES TO THE DETAILS CONTAINED WITHIN THIS HANDOUT. FURTHER INFORMATION MAY BE REQUIRED AND DETERMINED ON A CASE BY CASE BASIS.

FOR ADDITIONS WITH A RAISED FOUNDATION AND CONVENTIONAL FLOOR SYSTEM, AN ADDITIONAL FLOOR FRAMING PLAN SHEET IS REQUIRED SIMILAR TO CRC FIGURE R502.2 AND BASED ON TABLES R502.5(1) AND R502.5 (2).

NEITHER THE CITY OF HUNTINGTON BEACH NOR ANY OF ITS RESPECTIVE EMPLOYEES, AGENTS, OR OFFICIALS WARRANT THAT ACCESS AND USE OF THIS GUIDELINE AND PLAN TEMPLATE WILL BE FREE FROM FAILURES AND DEFECTS AND ASSUMES NO LIABILITY.

THIS HANDOUT IS GEARED TO PROJECTS WITHOUT A SOILS INVESTIGATION OR REPORT.FOR DESIGNS OTHER THAN THE CITY STANDARDS, A REGISTERED DEISNG PROFESSIONAL MUST INCORPORATE THE CONDITIONS FOUND IN THE SOILS REPORT AND PROVIDE THE DESIGN AND ENGINEERING.

RESIDENTIAL PLANS MUST BE LEGIBLE AND CAPABLE OF MICROFILM AND/OR SCANNING. ANY CONDITION NOT FOUND IN ACCORDANCE WITH THIS STANDARD WILL NULLIFY THE APPROVAL OF THIS HANDOUT.

ADDITIONAL INFORMATION IS CONTAINED IN OTHER HANDOUTS PROVIDED BY THE CITY AND CONDITIONS AND/OR GUIDELINES OF THOSE HANDOUTS ARE APPLICABLE TO ALL AREAS OF THE ALTERATIONS.

FOR ADDITIONS OF NEW AND EXISTING SQUARE FOOTAGE COMBINED THAT TOTALS OVER 5000 SQUARE FEET, ADDITIONS OVER 50% OF THE EXISTING AREA, COMBINES ALTERATIONS AND ADDITIONS OVER 50% OF THE EXISTING HABITABLE AREA OR THE ADDITION OF A SECOND FLOOR SHALL BE VERIFIED BY THE CITY OF HUNTINGTON BEACH FIRE DEPARTMENT FIRE PREVENTION DIVISION TO DETERMINE IF THIS ALTERATION/ADDITION WILL REQUIRE THE INSTALLATION OF A RESIDENTIAL FIRE SPRINKLER SYSTEM, METHANE BARRIER OR ADDITIONAL SOILS TESTING.

HOW TO USE THIS STANDARD PLAN

COMPLETE A PERMIT APPLICATION AND PREPARE YOUR PLANS. THREE (3) COMPLETE SETS ARE REQUIRED FOR SUBMITTAL TO THE PLANNING AND BUILDING DEPARTMENT. COMPLETE RESIDENTIAL SUBMITTAL REQUIREMENTS ARE OUTLINE IN THE PLANNING AND BUILDING DEPARTMENT'S PLAN CHECK SUBMITTAL FORM.

TO USE THIS TYPE V CONSTRUCTION PLAN TEMPLATE, SOME SHEETS OF THE PLAN REQUIRE ADDITIONAL SCALED DRAWINGS AND SITE SPECIFIC INFORMATION. THE PLOT/SITE PLAN MAY BE 1/8 INCH = 1 FOOT SCALE AND 12 POINT FONT FOR TEXT IS REQUIRED. THE SITE PLAN, FLOOR PLAN, ELEVATION AND CROSS-SECTION SHEETS SHALL BE A MINIMUM SCALE EQUAL TO 1/4 INCH = 1 FOOT AND 12 POINT FONT FOR TEXT IS REQUIRED.

ELEVATIONS ARE REQUIRED SHOWING A MINIMUM OF TWO (2) SIDES OF THE ADDITION. PROVIDE THE HEIGHT OF THE STRUCTURE FROM FINISH GRADE ON THE ELEVATIONS. ADDITIONAL ELEVATIONS MAY BE REQUIRED BY THE PLANING DIVISION OR FOR ADDITIONAL CLARIFICATIONS.

ALTERATIONS AND/OR ADDITIONS REQUIRE AN ENERGY ANALYSIS USING EITHER THE PRESCRIPTIVE MEASURES AS SPECIFIED IN TABLE 150.1-A FOR CLIMATE ZONE 6, REQUIRES THE CF-1R ADD OR CF-1R ALT AND MF-1R FORMS. IN EITHER CASE, THE ENERGY FORMS SHALL BE ELECTRONICALLY PLACED/MADE A PART OF PLANS AT THE BACK OF THE PLAN SET.

MECHANICAL, ELECTRICAL, AND PLUMBING DETAILS AND INFORMATION MUST BE INCLUDED. THIS MAY BE ON THE FLOOR PLAN OR A SEPARATE UTILITY PLAN MAY BE INCLUDED. THIS IS NOT A REQUIREMENT FOR SINGLE LINE OR ISOMETRIC DRAWINGS, ONLY THE LOCATIONS OF THE ELEMENTS DEPICTING THE CODE COMPLIANCE IS REQUIRED.

ALL CONSTRUCTION PROJECTS SHALL COMPLY WITH THE CITY OF HUNTINGTON BEACH CONSTRUCTION DEMOLITION RECYCLING PROGRAM. A LIST OF APPROVED HAULERS IS PROVIDED AT THE OF PERMITTING.

ANY WORK WITHIN THE CITY RIGHT-OF-WAY WILL REQUIRE A SEPARATE ENCROACHMENT PERMIT FROM THE PUBLIC WORKS DEPARTMENT.

SHEET INDEX (EXAMPLE)

C-1	COVER SHEET
C-2	**PLOT PLAN**
A-1	STANDARD NOTES
A-2	**FLOOR PLAN**
A-2.1	**FLOOR FRAMING PLAN (IF APPLICABLE)**
A-3	**ELEVATIONS / CROSS SECTIONS**
S-1	TYPE V SECTIONS
S-2	**TYPE V FOUNDATION DETAILS**
S-3	**TYPE V FRAMING DETAILS**
S-4	**TYPE V LATERAL**
S-5	**TYPE V TABLES**
CF-1R	**ENERGY FORMS**
MF-1R	**MANDATORY MEASURES**

BOLD FONT INDICATES SHEETS TO BE PROVIDED BY THE APPLICANT.

OWNER INFORMATION

BUILDING OWNER'S NAME

OWNER'S ADDRESS

OWNER'S CITY, ST, ZIP

OWNER'S PHONE NUMBER

OWNER'S SIGNATURE DATE

LEGAL DESCRIPTION

LOT # TRACT #

EXISTING LIVING AREA SQUARE FOOTAGE (SF)

EXISTING GARAGE AREA SQUARE FOOTAGE (SF)

NEW LIVING AREA SF NEW GARAGE AREA SF

TOTAL LIVING AREA SF TOAL GARAGE AREA SF

SITE AREA (SF) LOT COVERAGE (50% MAX)

PROJECT DESCRIPTION & PROJECT SCOPE

CITY OF HUNTINGTON BEACH
DEPARTMENT OF PLANNING AND BUILDING
BUILDING DIVISION
2000 MAIN ST, 3RD FLOOR
HUNTINGTON BEACH, CA 92648
OFF (714) 536-5241 FAX (714) 374-1647

HUNTINGTON BEACH

RES TYPE V CONSTRUCTION	Sheet C-1
PLAN 1 REV DATE: 01/08/2013	1 OF XX
Scale N.T.S.	

APPLICABLE BUILDING CODES

THIS PROJECT SHALL COMPLY WITH THE:
2013 CALIFORNIA RESIDENTIAL CODE
2013 CALIFORNIA MECHANICAL CODE
2013 CALIFORNIA ELECTRICAL CODE
2013 CALIFORNIA PLUMBING CODE
2013 CALIFORNIA ENERGY CODE
2013 CALIFORNIA ENERGY EFFICIENCY STANDARDS
(EFFECTIVE JULY 1ST, 2014)
2013 CALIFORNIA GREEN CODE
CITY OF HUNTINGTON BEACH MUNICIPAL CODE

NPDES NOTATION

THE DISCHARGE OF POLLUTANTS TO ANY STORM DRAINAGE SYSTEM IS PROHIBITED. NO SOLID WASTE, PETROLEUM BY-PRODUCTS, SOIL PARTICULATE, CONSTRUCTION WASTE, OR WASH-WATER GENERATED ON THE CONSTRUCTION SITE OR BY CONSTRUCTION ACTIVITIES SHALL BE PLACED, CONVEYED, OR DISCHARGED INTO THE STREET GUTTER, OR STORM DRAIN SYSTEM.

LIFE SAFETY

SMOKE DETECTORS ARE REQUIRED IN EACH SLEEPING ROOM, IN VICINITY LEADING TO SLEEPING ROOM AND EACH FLOOR LEVEL.
CARBON MONOXIDE ALARMS ARE REQUIRED OUTSIDE THE VICINITY LEADING TO SLEEPING ROOMS AND ON EACH FLOOR LEVEL.
ALARMS AND DETECTORS SHALL BE HARD-WIRED AND INTERCONNECTED WHEN ACCESS TO THE ATTIC OR CRAWL SPACE OR THE INTERIOR SURFACES ARE REMOVED.

THE RESIDENTIAL BUILDING IS:
- ☐ FIRE SPRINKLERS INSTALLED
- ☐ NON-SPRINKLERED

BUILDING DIVISION NOTES

THIS HANDOUT IS DESIGNED FOR PROJECTS WITHOUT A SOILS INVESTIGATION OR REPORT. FOR DESIGNS OTHER THAN THE CITY STANDARD, A REGISTERED DESIGN PROFESSIONAL MUST INCORPORATE THE CONDITIONS FOUND IN THE SOILS REPORT AND PROVIDE THE DESIGN AND ENGINEERING.

ANY CONDITION NOT FOUND IN ACCORDANCE WITH THIS STANDARD WILL NULLIFY THE APPROVAL OF THIS HANDOUT.

ADDITIONAL INFORMATION IS CONTAINED IN OTHER HANDOUTS PROVIDED BY THE CITY, CODE REQUIREMENTS, CONSTRUCTION CONDITIONS AND/OR PROJECT GUIDELINES CONTAINED IN THOSE HANDOUTS ARE APPLICABLE TO ALL AREAS OF ALTERATION.

FOR ADDITIONS OF NEW AND EXISTING SQUARE FOOTAGE COMBINED THAT TOTALS OVER 5000 SQUARE FEET, ADDITIONS OVER 50% OF THE EXISTING AREA, COMBINED ALTERATION AND ADDITIONS OVER 50% OF THE EXISTING HABITABLE AREA OR THE ADDITION OF A SECOND FLOOR SHALL BE VERIFIED BY THE CITY OF HUNTINGTON BEACH FIRE DEPARTMENT FIRE PREVENTION DIVISION TO DETERMINE IF THIS ALTERATION/ADDITION WILL REQUIRE THE INSTALLATION OF A RESIDENTIAL FIRE SPRINKLER SYSTEM, METHANE BARRIER OR ADDITIONAL SOILS TESTING.

CONSTRUCTION NOTES

THE CITY OF HUNTINGTON BEACH STANDARD APPLIES TO SINGLE STORY ROOM ADDITIONS. FOR TWO (2) STORY CONSTRUCTION/ADDITIONS, WHERE CONSTRUCTION REQUIRES THE REMOVAL OF EXISTING STRUCTURAL COMPONENTS, PROJECTS LOCATED ON A SLOPE OR BLUFF TOP LOT, LOCATED WITHIN A FLOOD PLAIN OVERLAY (FP), LOCATED WITHIN IN A SPECIFIC FAULT ZONE SPECIFIED BY THE PLANNING DIVISION, AN REGISTERED DESIGN PROFESSIONAL MAY BE REQUIRED.
FOR ADDITIONS OF OVER 400 SQUARE FEET, A GRAIN AND DRAINAGE PLAN IS REQUIRED THROUGH THE PUBLIC WORKS DEPARTMENT UNDER A SEPARATE PERMIT.

SEPARATE PERMITS ARE REQUIRED FOR ACCESSORY STRUCTURES SUCH AS BUILDINGS, LANDSCAPE, PATIO COVERS, FENCES, POOLS/SPAS/PORTABLE HOT TUBS, RETAINING WALLS, BLOCK WALLS, DEMOLITION, ETC.

MINIMUM CONCRETE STRENGTH = 2500 PSI, TYPE V CEMENT, WITH A WATER CEMENT RATION OF 0.40 IS REQUIRED UNLESS A SOILS REPORT SPECIFIES OTHERWISE.

FOUNDATION SHALL BE DESIGNED BASED ON A MINIMUM OF 1000 PSF SOIL BEARING PRESSURE AND 12 INCHES BELOW GRADE WITH (2) #4's OR (1) #5 UNLESS A SOILS REPORT SPECIFIES OTHERWISE.

FOR SITE DRAINAGE, THE EXTERIOR FINISHED GRADE ADJACENT TO THE STRUCTURE SHALL COMPLY TO R403.1 CRC.

ANCHOR BOLTS SHALL BE EMBEDDED AT LEAST 7 INCHES INTO CONCRETE. FOR TWO-POUR FOUNDATIONS, THE REQUIRED EMBEDMENT SHALL BE PROVIDED IN THE FIRST POUR. ANCHOR BOLTS SHALL BE LOCATED NOT MORE THAN 12 INCHES, OR LESS THAN 4-1/2 INCHES FROM SILL PLATE ENDS, CORNERS AND SPLICES. ANCHOR BOLTS SHALL BE INSTALLED WITH 3" x 3" x 0.229" SQUARE PLATE WASHER.

ROOF AND CEILING CONSTRUCTION IS LIMITED TO A TOTAL OF 15 LBS PER SQUARE FOOT. THE ATTIC SPACE MAY NOT BE USED AS LIGHT STORAGE. FOR LIGHT STORAGE IN THE ATTIC AREA, AN ENGINEERED DESIGN IS REQUIRED.

FASTENERS FOR PRESERVATIVE TREATED WOOD SHALL BE OF HOT DIPPED ZINC-COATED GALVANIZED STEEL, STAINLESS STEEL, SILICON BRONZE OR COPPER.

FRAMING ANGLES AND PLATE SHALL BE REQUIRED TO ATTACH EACH RAFTER BLOCK TO THE TOP PLATE. FRAMING ANGLES OR PLATES SHALL BE ICC LISTED. MINIMUM OF 20 GAUGE ANGLES AND PLATES SHALL BE INSTALLED PER MANUFACTURER'S RECOMMENDATIONS.

SLAB-ON-GRADE SHALL BE A MINIMUM 3-1/2 INCH THICK, REINFORCED WITH #4 BARS AT 18 INCH EACH WAY/ REINFORCING SHALL BE LOCATED AT SLAB MID-HEIGHT. A MINIMUM 2 ICH SAND, OVER A 6 MIL VAPOR BARRIER, OVER 2 INCH SAND, OVER NATURAL GRADE.

EAVE AND OVERHANG SETBACKS MAY BE REDUCED TO 2 FEET IF 1-HOUR EAVE CONSTRUCTION IS PROVIDED.

P.T. INDICATES "PRESERVATIVE-TREATED" WOOD.

ROOF SHALL BE A CLASS 'C' MINIMUM LISTED ASSEMBLY AND LESS THAN 6 LBS PER SQUARE FOOT. TILE OR ROOFING PRODUCTS GREATER THAN 6 LBS PER SQUARE FOOT WILL REQUIRE A LICENSED DESIGN PROFESSIONAL ACCOMPANIED WITH STRUCTURAL CALCULATIONS.

HABITABLE ROOMS SHALL BE PROVIDED WITH NATURAL LIGHT OF AN AREA NOT LESS THAN 8% OF THE FLOOR AREA.

HABITABLE ROOMS SHALL BE PROVIDED WITH NATURAL VENTILATION OF AN AREA NOT LESS THAN 4% OF THE FLOOR AREA.

ARC-FAULT CIRCUIT PROTECTION (AFCI) SHALL BE PROVIDED FOR ALL 15 AND 20 AMPER BRANCH CIRCUITS SUPPLYING UTILIZATION EQUIPMENT IN IN DWELLING UNIT FAMILY, DINING, LIVING, PARLOR, LIBRARIES, DENS, BEDROOMS, SUNROOMS, RECREATION ROOMS, CLOSETS, HALLWAYS, OR SIMILAR ROOMS AND AREAS.

TAMPER RESISTANT RECEPTACLES ARE REQUIRED PER 406.11 AND 210.52 CEC.

CITY OF HUNTINGTON BEACH
DEPARTMENT OF PLANNING AND BUILDING
BUILDING DIVISION
2000 MAIN ST, 3RD FLOOR
HUNTINGTON BEACH, CA 92648
OFF (714) 536-5241 FAX (714) 374-1647

HUNTINGTON BEACH

RES TYPE V CONSTRUCTION	Sheet
PLAN 1	A-1
REV DATE: 01/08/2013	
Scale N.T.S.	1 OF XX

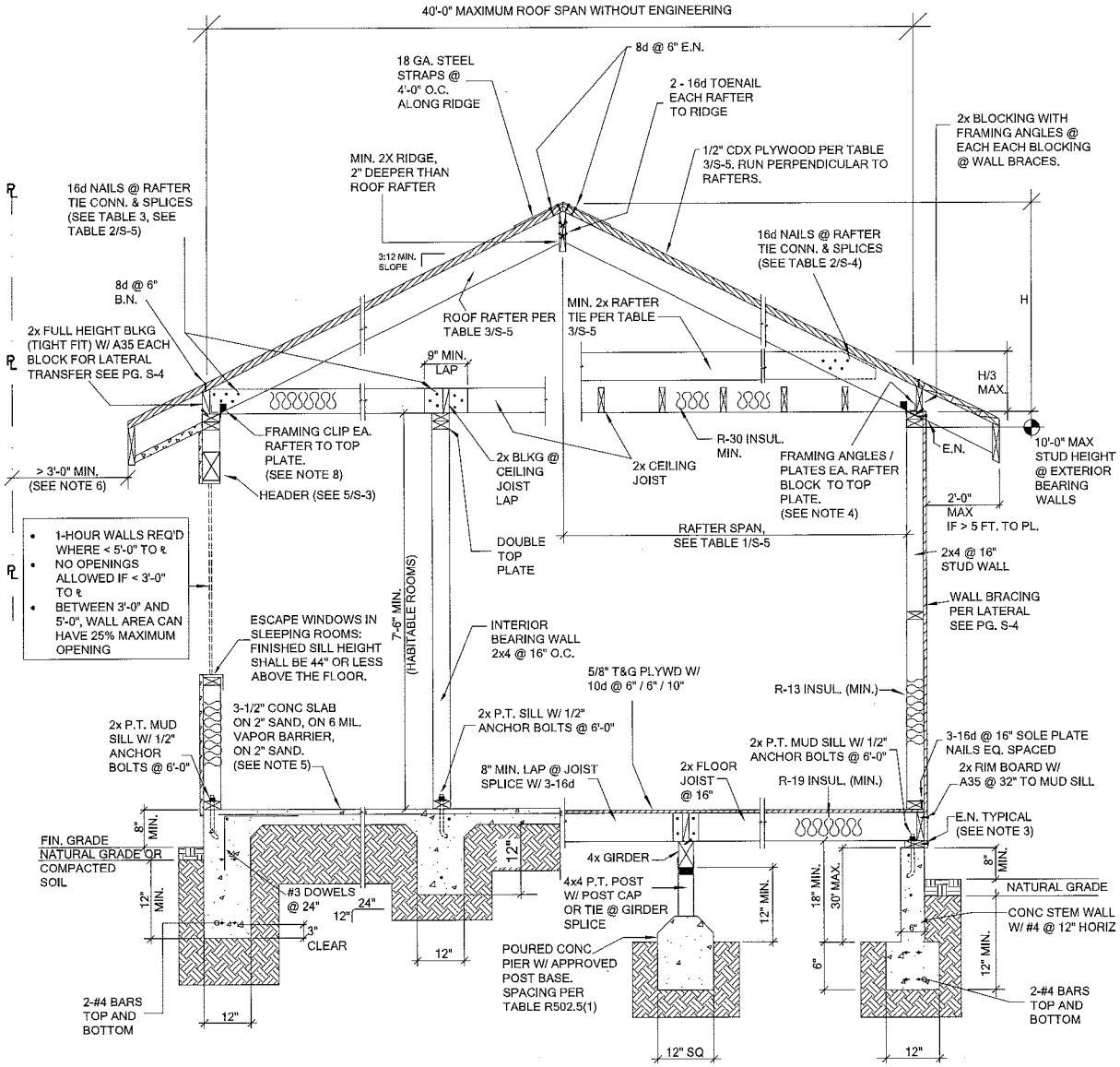

BUILDING SECTION

NOTES:

1. MINIMUM CONCRETE STRENGTH = 3000PSI (2500 PSI MAY BE USED IF PLANS ARE DESIGNED BY AN ENGINEER. SPECIAL INSPECTION IS REQUIRED FOR CONCRETE STRENGTH GREATER THAN 2500 PSI.
2. ANCHOR BOLTS SHALL BE EMBEDDED AT LEAST 7" INTO CONCRETE. FOR TWO-POUR FOUNDATIONS, THE REQUIRED EMBEDMENT SHALL BE PROVIDED IN THE FIRST POUR. ANCHOR BOLTS SHALL BE LOCATED NOT MORE THAN 12", OR LESS THAN 4-1/2" FROM SILL PLATE ENDS, CORNERS AND SPLICES. ANCHOR BOLTS SHALL BE INSTALLED WITH 3" x 3" x 0.229" SQUARE PLATE WASHERS.
3. FASTENERS FOR PRESERVATIVE TREATED WOOD SHALL BE OF HOT DIPPED ZINC-COATED GALVANIZED STEEL, STAINLESS STEEL, SILICON BRONZE OR COPPER.
4. FRAMING ANGLES AND PLATES SHALL BE REQUIRED TO ATTACH EACH RAFTER BLOCK TO THE TOP PLATE. FRAMING ANGLES OR PLATES SHALL BE ICC LISTED, MINIMUM OF 20 GAUGE ANGLES AND PLATES SHALL BE INSTALLED PER MANUFACTURER'S RECOMMENDATIONS.
5. SLAB ON GRADE SHALL BE REINFORCED WITH 6x6 - W1.4xW1.4 WIRE MESH OR #4 BARS @ 18" EACH WAY. REINFORCING SHALL BE LOCATED AT SLAB MID-HEIGHT.
6. EAVE/OVERHANG SETBACKS MAY BE REDUCED TO 2'-0" IF 1-HOUR EAVE CONSTRUCTION IS PROVIDED OR NON-RATED WITH FIRE SPRINKLER.
7. P.T. INDICATES "PRESERVATIVE-TREATED WOOD.
8. FRAMING CLIPS SHALL BE 18 GAUGE STEEL WITH 4-8d NAILS PER LEG (8-8d NAILS PER CLIP). FRAMING CLIPS SHALL BE ICC APPROVED AND INSTALLED PER MANUFACTURER'S RECOMMENDATIONS.
9. THE TOTAL DEAD LOAD FOR THE COMBINED ROOF AND CEILING ASSEMBLIES SHALL NOT EXCEED 15 PSF.
10. FOR OTHER FASTENERS, SEE TABLE R602.3(1).
11. EGRESS WINDOW: WHERE EMERGENCY ESCAPE AND RESCUE OPENING ARE PROVIDED THEY SHALL HAVE THE BOTTOM OF THE CLEAR OPENING NOT GREATER THAN 44 INCHES MEASURED FROM THE FLOOR. EMERGENCY ESCAPE AND RESCUE OPENINGS SHALL OPEN DIRECTLY INTO A PUBLIC WAY, OR TO A YARD OR COURT THAT OPENS TO A PUBLIC WAY. ALL EMERGENCY ESCAPE AND RESCUE OPENINGS SHALL HAVE A MINIMUM NET CLEAR OPENING OF 5.7 SQUARE FEET EXCEPT THAT GRADE FLOOR OPENINGS SHALL HAVE A MINIMUM NET CLEAR OPENING OF 5 SQUARE FEET. THE MINIMUM NET CLEAR OPENING HEIGHT SHALL BE 24 INCHES AND THE MINIMUM NET CLEAR OPENING WIDTH SHALL BE 20 INCHES. (R310 CRC)

CITY OF HUNTINGTON BEACH
DEPARTMENT OF PLANNING AND BUILDING
BUILDING DIVISION
2000 MAIN ST, 3RD FLOOR
HUNTINGTON BEACH, CA 92648
OFF (714) 536-5241 FAX (714) 374-1647

HUNTINGTON BEACH

RES TYPE V CONSTRUCTION	Sheet
PLAN 1	S-1
REV DATE: 01/08/2013	
Scale N.T.S.	1 OF XX

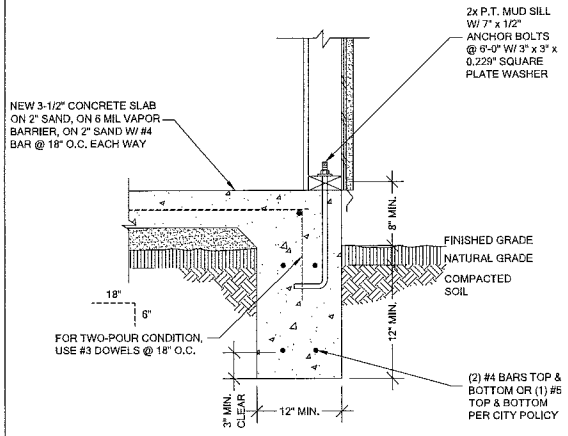

EXTERIOR FOOTING (1)

SCALE: N.T.S.

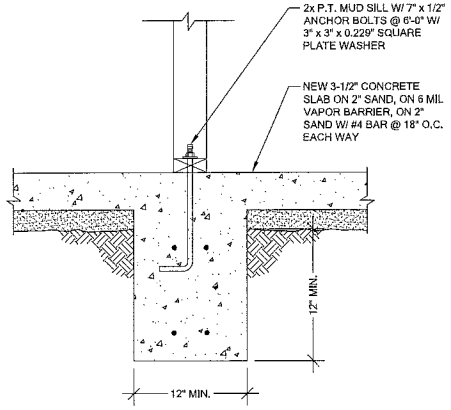

INTERIOR FOOTING (2)

SCALE: N.T.S.

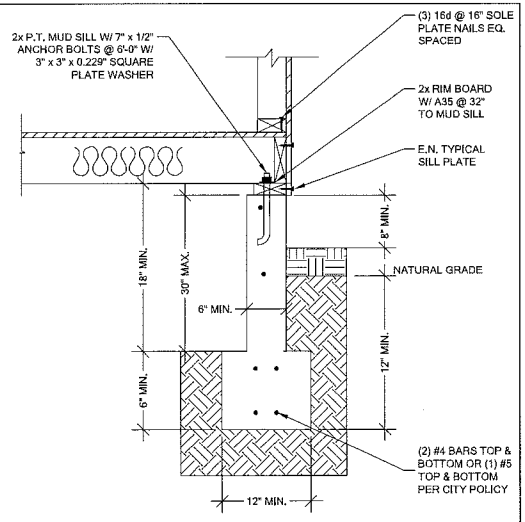

RAISED FOUNDATION (3)

SCALE: N.T.S.

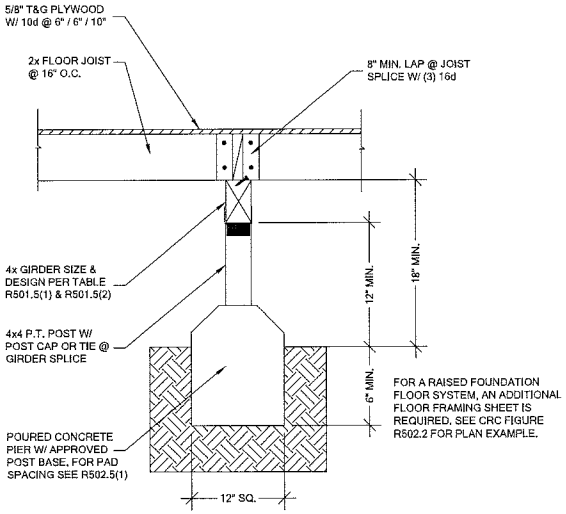

PIER FOOTING (4)

SCALE: N.T.S.

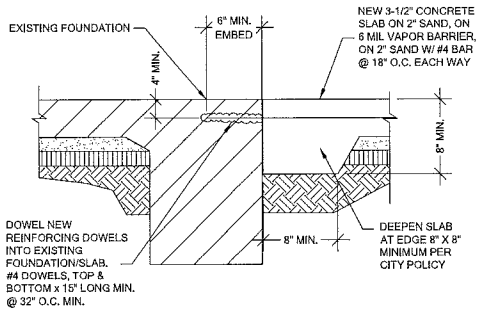

NEW TO EXISTING SLAB OR FOOTING (5)

SCALE: N.T.S.

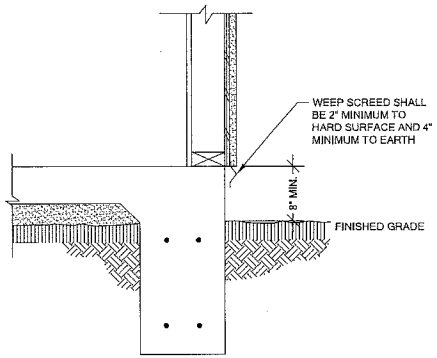

NEW TO EXISTING SLAB OR FOOTING (6)

SCALE: N.T.S.

CITY OF HUNTINGTON BEACH
DEPARTMENT OF PLANNING AND BUILDING
BUILDING DIVISION
2000 MAIN ST, 3RD FLOOR
HUNTINGTON BEACH, CA 92648
OFF (714) 536-5241 FAX (714) 374-1647

HUNTINGTON BEACH

RES TYPE V CONSTRUCTION	Sheet S-2
PLAN 1 REV DATE: 01/08/2013	1 OF XX
Scale N.T.S.	

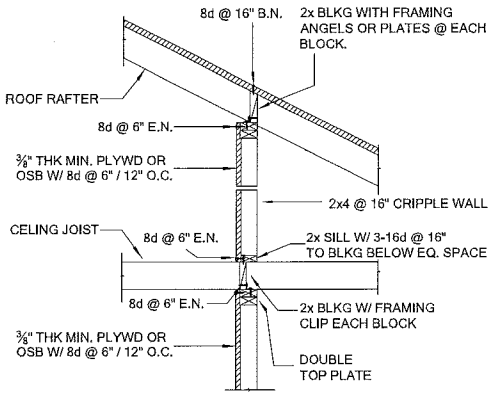

INTERIOR BRACED WALL (1)

SCALE: N.T.S.

ALLOW. PURLIN SPAN

SIZE	SPAN
2x4	4 FEET
2x6 & LARGER	6 FEET

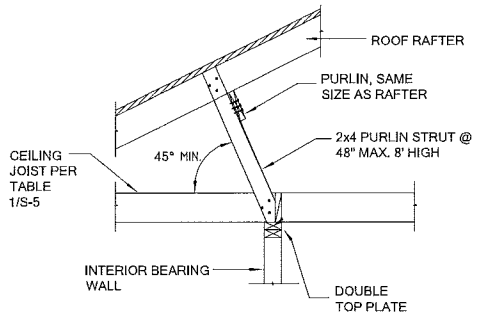

PURLIN BRACING (CRC R802.5.1) (2)

SCALE: N.T.S.

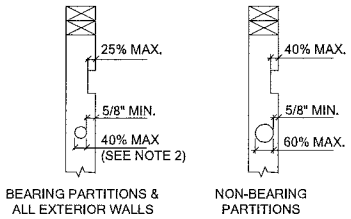

NOTES:
1. BORED HOLES SHALL NOT BE LOCATED AT THE SAME SECTION AS A CUT OR NOTCH.
2. BORED HOLES IN BEARING STUDS MAY BE INCREASED TO 60% IF STUDS ARE DOUBLED; NO MORE THAN TWO SUCCESSIVE DOUBLE STUDS MAY BE BORED.

BEARING & NON-BEARING WALLS NOTCHING & HOLES (CRC R502.8, R602.6 & R602.6.1) (3)

SCALE: N.T.S.

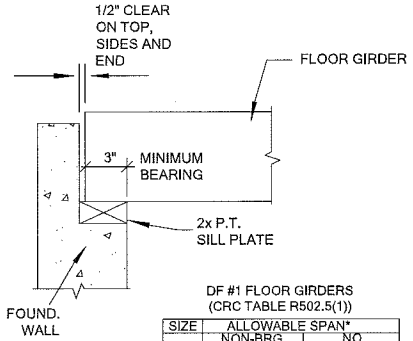

DF #1 FLOOR GIRDERS (CRC TABLE R502.5(1))

SIZE	ALLOWABLE SPAN*	
	NON-BRG PARTITIONS	NO PARTITIONS
4x6	5'-3"	5'-8"
4x8	6'-10"	7'-4"

* MAXIMUM TRIBUTARY WIDTH = 8'-0"

NOTES
1. FLOOR GIRDERS SHALL BE SPACED AT 8'-0" O.C. MAX.
2. FOR CONVENTIONAL RAISED FLOOR SYSTEM, AN ADDITIONAL FLOOR FRAMING PLAN SHEET IS REQUIRED.

FLOOR GIRDERS (CRC R502.5 & R502.6) (4)

SCALE: N.T.S.

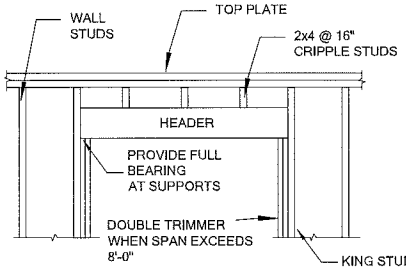

DF #1 HEADER, ALLOWABLE SPANS*

SPAN	SIZE
UP TO 4'-0"	4x4
4'-1" TO 6'-0"	4x6
6'-1" TO 8'-0"	4x8
8'1" TO 10'-0"	4x10
10'-1" TO 12'-0"	4x12

* MAXIMUM TRIBUTARY WIDTH = 12'-6"

* ALSO SEE HEADER SPAN TABLES R502.5(1) FOR ADDITIONAL INFORMATION

HEADER / LINTEL (CRC R602.7) (5)

SCALE: N.T.S.

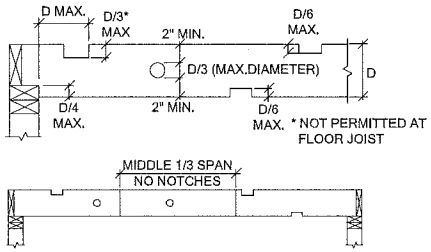

RAFTER, CEILING & FLOOR JOIST NOTCHING & HOLES (CRC R502.8, R602.6 & R602.6.1) (6)

SCALE: N.T.S.

CITY OF HUNTINGTON BEACH
DEPARTMENT OF PLANNING AND BUILDING
BUILDING DIVISION
2000 MAIN ST, 3RD FLOOR
HUNTINGTON BEACH, CA 92648
OFF (714) 536-5241 FAX (714) 374-1647

HUNTINGTON BEACH

RES TYPE V CONSTRUCTION	Sheet S-3
PLAN 1 REV DATE: 01/08/2013	1 OF XX
Scale N.T.S.	

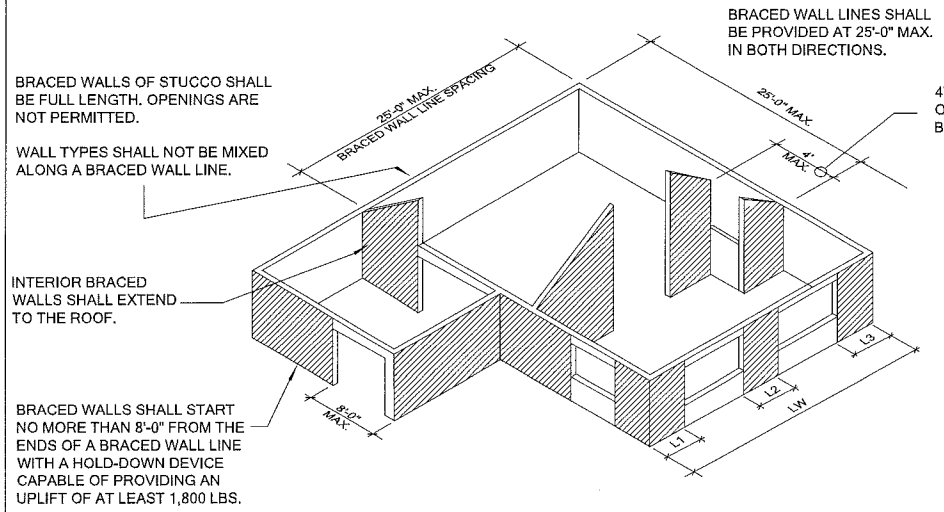

MINIMUM LENGTH OF WOOD STRUCTURAL PANEL WALLS: 12'-0" FOR EVERY 25'-0"

$$\frac{L1 + L2 + L3}{LW} \geq 0.48$$

$L1 + L2 + L3 \geq 12'\text{-}0"$

$L1, L2, L3 \geq 4'$

NOTE:
HOLDDOWNS ARE REQ'D WHERE LESS THAN 6'-0"

NOTE: FOR WALL ATTACHMENTS, SEE TABLE CRC R602.10

1. BRACED WALL LINES SHALL BE CLEARLY IDENTIFIED ON THE FLOOR PLAN.
2. BRACING SHALL BE IN ACCORDANCE WITH CRC SECTION R602.10.
3. BRACING METHOD SHOWN IN THE DESIGN GUIDELINE ARE SAMPLES ONLY. OTHER ALTERNATIVES APPLICABLE TO THE PROJECT CONDITIONS MAY BE USED WHICH SHALL COMPLY WITH THE CURRENT CRC.
4. WHERE BUILDING OR PORTION THEREOF DOES NOT COMPLY WITHIN OR MORE OF THE BRACING REQUIREMENTS AS SPECIFIED IN SECTION R602.10, THOSE PORTIONS SHALL BE DESIGNED AND CONSTRUCTED PER SECTION R301.1 AND REQUIRES A DESIGN BY A REGISTERED DESIGN PROFESSION OR ARCHITECT.

BASIC COMPONENTS OF THE LATERAL BRACING SYSTEM

~ PROPOSED BUILDING SHALL BE OF RECTANGULAR OR L-SHAPED IN PLAN ~

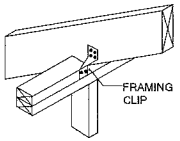

FRAMING CLIP FOR UPLIFT EACH RAFTER

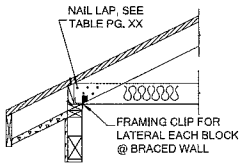

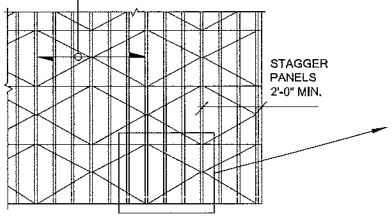

PARTIAL ROOF/FLOOR PLAN

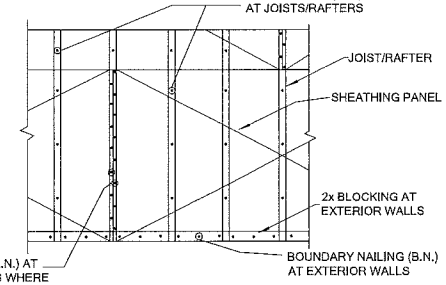

ROOF/FLOOR SHEATHING

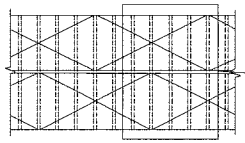

PARTIAL WALL ELEVATION

PANEL NAILING SCHEDULE

LOCATION		B.N. / E.N. / F.N.
ROOFS:	8d @	6" / 6" / 12"
FLOORS:	10d @	6" / 6" / 10"
WALLS:	8d @	-- / 6" / 12"

MINIMUM LENGTH OF WOOD STRUCTURAL PANEL WALLS

PANEL LENGTH TABLE

BRACED WALL LINE LENGTH	MINIMUM TOTAL PANEL LENGTH
10'-0"	4'-0"
20'-0"	5'-0"
30'-0"	7'-6"
40'-0"	10'-0"
50'-0"	12'-6"

WSP METHOD 3/8" THICK PLYWOOD W/ 8d @ 6", 12" BLOCKED @ PANEL EDGES.

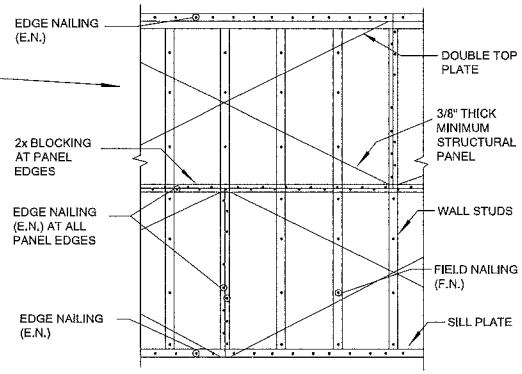

WALL SHEATHING

NOTES:
1. NAILS SHALL BE PLACED ⅜" FROM PANEL EDGES.
2. PROVIDE ⅛" GAP BETWEEN SHEATHING PANELS.
3. MINIMUM DIMENSION OF SHEATHING PANEL IN ANY DIRECTION SHALL BE 2'-0".
4. WALL SHEATHING PANELS MAY BE INSTALLED WITH THE LONG DIRECTION ORIENTED VERTICALLY.
5. FOR WALL ATTACHMENTS, SEE TABLE 2308.12.4

CITY OF HUNTINGTON BEACH
DEPARTMENT OF PLANNING AND BUILDING
BUILDING DIVISION
2000 MAIN ST, 3RD FLOOR
HUNTINGTON BEACH, CA 92648
OFF (714) 536-5241 FAX (714) 374-1647

HUNTINGTON BEACH

RES TYPE V CONSTRUCTION	Sheet S-4
PLAN 1 REV DATE: 01/08/2013	1 OF XX
Scale N.T.S.	

TABLE 1 - ALLOWABLE SPANS - DF#2 RAFTERS, CEILING JOIST & FLOOR JOIST

MEMBER SIZE	MEMBER SPACING	ROOF RAFTER LIGHT ROOFING (1)	CEILING JOIST (2)	FLOOR JOIST (3)
2" x 6"	12" O.C.	16' - 7"	19' - 6"	10' - 9"
	16" O.C.	14' - 4"	17' - 8"	9' - 9"
	24" O.C.	11' - 9"	9' - 10"	8' - 1"
2" x 8"	12" O.C.	21' - 0"	25' - 8"	14' - 2"
	16" O.C.	18' - 2"	23' - 0"	12' - 7"
	24" O.C.	14' - 10"	14' - 10"	10' - 3"
2" x 10"	12" O.C.	25' - 8"	EXCEEDS 26' - 0"	17' - 9"
	16" O.C.	22' - 3"	EXCEEDS 26' - 0"	15' - 5"
	24" O.C.	18' - 2"	22' - 10"	12' - 7"
2" x 12"	12" O.C.	EXCEEDS 26' - 0"	----------	20' - 7"
	16" O.C.	25' - 9"	----------	17' - 10"
	24" O.C.	21' - 0"	----------	14' - 7"

1. ROOF LIVE LOAD = 20 PSF & DEAD LOAD = 10 PSF (CRC R802.5(1); CEILING NOT ATTACHED (SEE FOOTNOTE IN TABLE R802.5(1))
2. NON-HABITABLE ATTIC W/ LIMITED STORAGE: LIVE LOAD = 20 PSF & DEAD LOAD = 10 PSF (TABLE R802.4(1))
3. RESIDENTIAL LIVING AREAS: LIVE LOAD = 40 PSF & DEAD LOAD = 10 PSF (TABLE R502.3.1(2))

COMBINED ROOF & CEILING ASSEMBLIES SHALL NOT EXCEED DEAD LOAD = 15 PSF

TABLE 2 - RAFTER TIE CONNECTIONS, # OF 16d COMMON NAILS (SEE NOTE 5)

TIE SPACING	ROOF PITCH																	
	3:12			4:12			5:12			7:12			9:12			12:12		
	SPAN			SPAN			SPAN			SPAN			SPAN			SPAN		
	12'	20'	28'	12'	20'	28'	12'	20'	28'	12'	20'	28'	12'	20'	28'	12'	20'	28'
12" O.C.	4	6	8	3	5	6	3	4	5	3	4	4	3	3	4	3	3	3
16" O.C.	5	8	10	4	6	8	3	5	6	3	4	5	3	4	4	3	3	4
24" O.C.	7	11	15	5	8	12	4	7	9	3	5	7	3	4	6	3	4	4

SEE CRC TABLE R802.5.1(9) FOR OTHER REQUIREMENTS.
TABULATED HEEL JOINT CONNECTIONS ARE FOR TIES LOCATED AT THE BOTTOM OF THE CEILING / ATTIC.
WHEN CEILING JOIST / RAFTER TIES ARE LOCATED HIGHER, INCREASE THE NUMBER OF 16d PER FOOTNOTE 'H' IN THE CRC TABLE R802.5.1(9).

TABLE 3 - PLYWOOD OR OSB FLOOR & ROOF SHEATHING ALLOWABLE SPANS*

SHEATHING GRADES		ROOF				FLOOR
SPAN RATING FLOOR/ROOF	SPAN THICKNESS	MAX. SPAN (IN.)		LOADS (PSF)		PANEL EDGES W/ T&G JOINTS OR BLOCKING MAX. SPAN (IN.)
		W/ EDGE SUPPORT	W/O EDGE SUPPORT	TOTAL LOAD	LIVE LOAD	
24/0	7/16, 1/2	24	20	40	30	0
24/16	7/16, 1/2	24	24	50	40	16
32/16	15/32, 1/2, 5/8	32	28	40	30	16
40/20	5/8, 3/4, 7/8	40	32	40	30	20
48/24	23/32, 3/4, 7/8	48	36	45	35	24

SHEATHING PANELS SHALL BE CONTINUOUS OVER TWO OR MORE SPANS AND PERPENDICULAR TO SUPPORTS. FOR 1/2" SHEATHING, MAXIMUM SPAN SHALL BE 24". EDGE SUPPORT MAY BE PROVIDED BY T&G EDGES, 2x BLOCKING OR PANEL EDGE CLIPS.

NOTES

1. FOR ADDITIONAL FASTENING, SEE CRC TABLE R602.3(1).
2. EXTERIOR WALLS, INTERIOR BEARING WALLS AND BRACED WALLS REQUIRE CONTINUOUS FOOTINGS.
3. "DF" ON THESE SHEETS REFERS TO DOUGLAS FIR-LARCH. SAWN LUMBER SHALL BE IDENTIFIED BY THE GRADE MARK OF AN APPROVED LUMBER GRADING ON OR INSPECTION AGENCY.
4. "DL" AND "LL" ON THESE SHEETS INDICATES "DEAD LOAD" AND "LIVE LOAD," RESPECTIVELY.
5. WOOD MEMBERS SHALL BE OF SUFFICIENT SIZE TO PREVENT SPLITTING DUE TO NAILING. SPIT MEMBERS SHALL BE REMOVED AND REPLACED.
6. WHEN FRAMED WITH ENGINEERED WOOD TRUSSES, ROOF DIAPHRAGMS SHALL BE CONNECTED TO INTERIOR BRACED WALLS BY MEANS OF DRAG TRUSSES OR TRUSS BLOCKING.

CITY OF HUNTINGTON BEACH
DEPARTMENT OF PLANNING AND BUILDING
BUILDING DIVISION
2000 MAIN ST, 3RD FLOOR
HUNTINGTON BEACH, CA 92648
OFF (714) 536-5241 FAX (714) 374-1647

HUNTINGTON BEACH

RES TYPE V CONSTRUCTION	Sheet S-5
PLAN 1 REV DATE: 01/08/2013	1 OF XX
Scale N.T.S.	