Specifications for Miratech Catalytic Converters

Provide 9ea Catalytic Convertors per attached specification and drawing. No Equals.

- Miratech: 3 Way Catalytic Converter
- Catalyst/Silencer Model Number: IQS-20-08-EC2
- Material*: 304 SS
- Diameter: 20 inches
- Inlet Pipe Size & Connection: 8 inch FF Flange, 150# ANSI standard bolt pattern
- Outlet Pipe Size & Connection: 8 inch FF Flange, 150# ANSI standard bolt pattern
- Overall Length: 37 inches
- Weight (including catalyst): 280 lbs
- Converter Pressure Loss: 3.0 in WC
- Instrumentation Ports: 2 inlet/2 outlet (1/2" NPT)
- Oxygen Sensor Ports: 1 inlet/1 outlet (18mm)
- Exhaust Temperature Limits: 750 - 1,250°F (catalyst inlet); 1,350°F (catalyst outlet)

Post System Emission Data:

- .15 Grams Nox g/bhp-hr
- .60 Grams CO g/bhp-hr
- .15 Grams NMHC g/bhp-hr

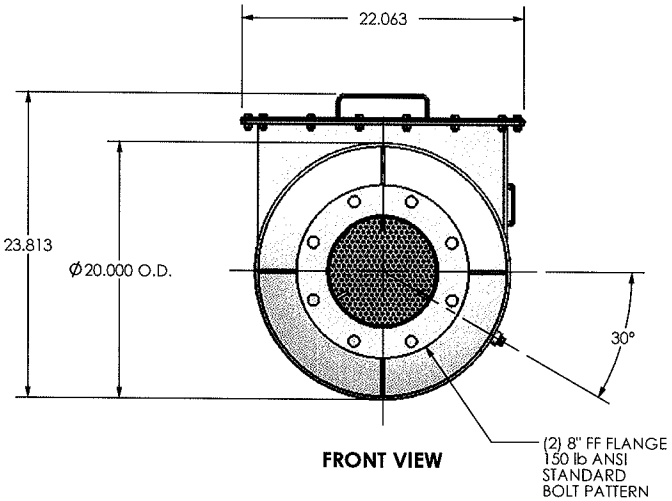

FRONT VIEW

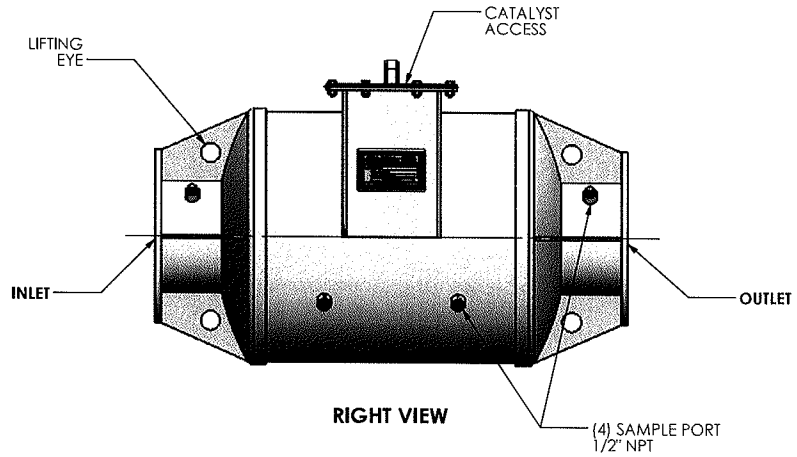

RIGHT VIEW

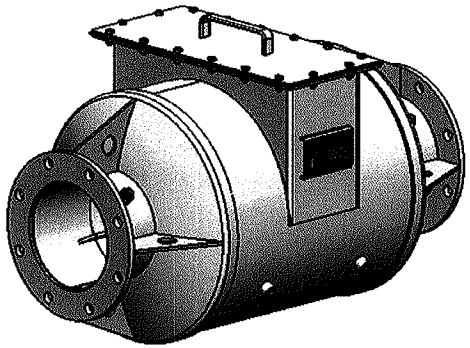

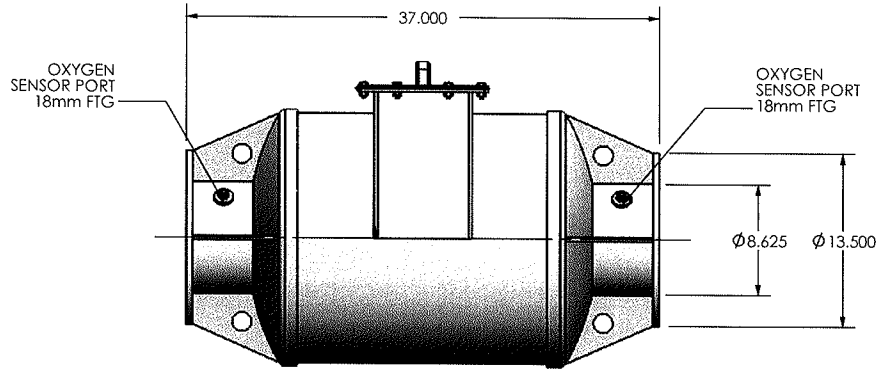

LEFT VIEW

MATERIAL CONSTRUCTION:

- STAINLESS STEEL HOUSING WITH CARBON STEEL FLANGES

PROJECT NAME	
SALES ORDER NO.	
FABRICATION P.O.	

PROPRIETARY AND CONFIDENTIAL

THE INFORMATION CONTAINED IN THIS DRAWING IS THE SOLE PROPERTY OF MIRATECH CORPORATION. ANY REPRODUCTION IN PART OR AS A WHOLE WITHOUT THE WRITTEN PERMISSION OF MIRATECH CORPORATION IS PROHIBITED.

DIMENSIONS ARE APPROXIMATE IN INCHES UNLESS OTHERWISE SPECIFIED

DO NOT SCALE DRAWING

DRAWN	AJM	DATE	10/27/2009
REVIEWED BY	-	DATE	-

MIRATECH CORPORATION

SP-IQSG-20-08
Sales Drawing

DRAWING	SP-IQSG-20-08 SD		REV 0
SIZE A	SCALE 1:15	WEIGHT: 232 lb FULLY LOADED	SHEET 1 OF 1